Route Distinguisher Outbound Route Filter (RD-ORF) for BGP-4

[draft-wang-idr-rd-orf]

Wei Wang (China Telecom)

Aijun Wang (China Telecom)

Shunwan Zhuang (Huawei)

Jie Dong (Huawei)

Haibo Wang (Huawei)

IETF 108@Spain, July. 2020

- Problems Description
- Proposed Solutions
- Further Action

Problem Description

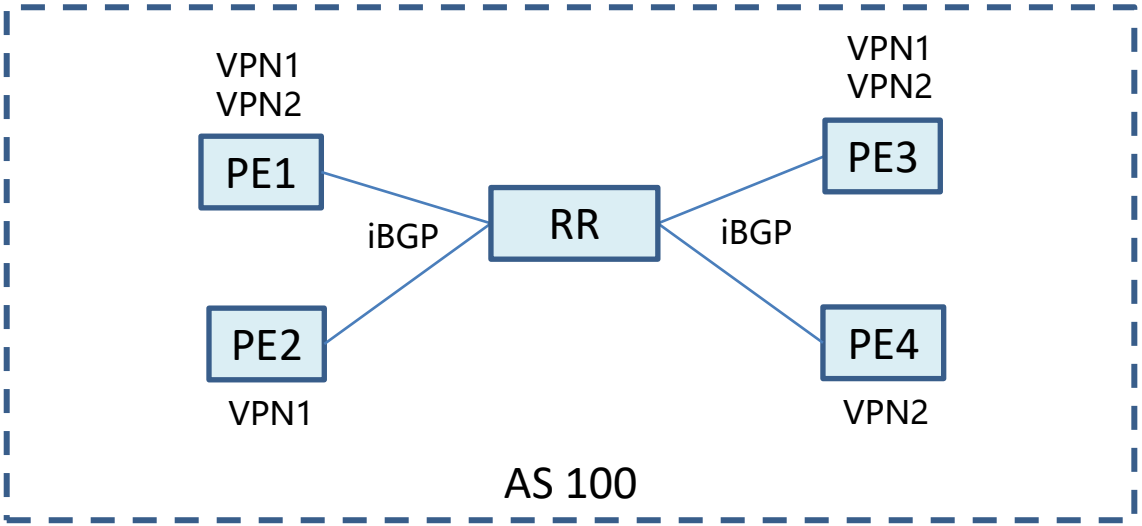

VPN Routes Exchange via RR within one Single Domain

- PE1 – PE4 maintain VPN route information in Virtual Routing Forwarding (VRF)
- RR do not maintain any VRF

- When the VRF of VPN1 in PE2 overflows, BGP Maximum-Prefix Features cannot be used to notify the source of the VPN routes this unexpected event.

Problem Description

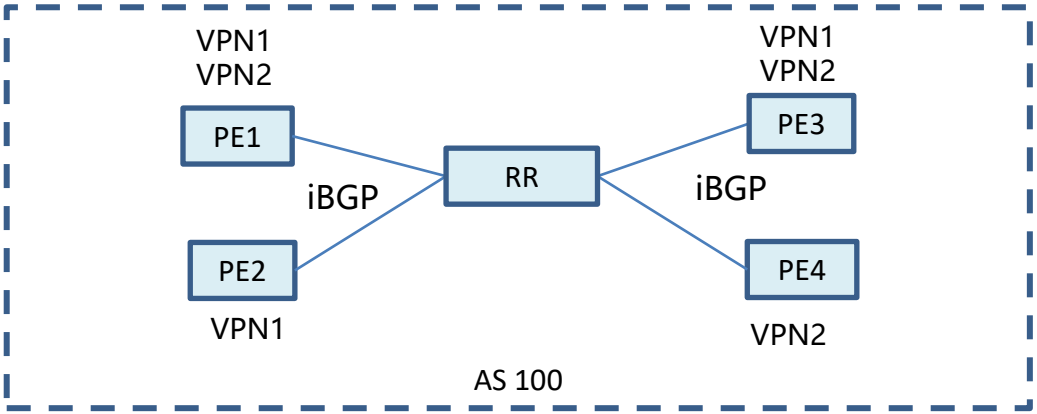

VPN Routes Exchange via RR within one Single Domain

- Existing solutions:
  - Route Target Constraint (RTC) as defined in [RFC4684]
    - Can only specify which VPN routes it wants
    - Can't be used to control the route limit within one specified VPN
  - Address Prefix ORF as defined in [RFC5292]
    - Need to be preconfigured.
    - But the source of the overflow VPN can't be decided in advance.

- The Proposed Route Distinguisher Outbound Route Filter (RD-ORF) mechanism：
  - Can control the VPN route limit based on source RD and originator
  - Event-driven, does not need to be pre-configured

Solution – RD-ORF (single-domain scenario)

When the VRF of VPN1 in PE1 overflows:

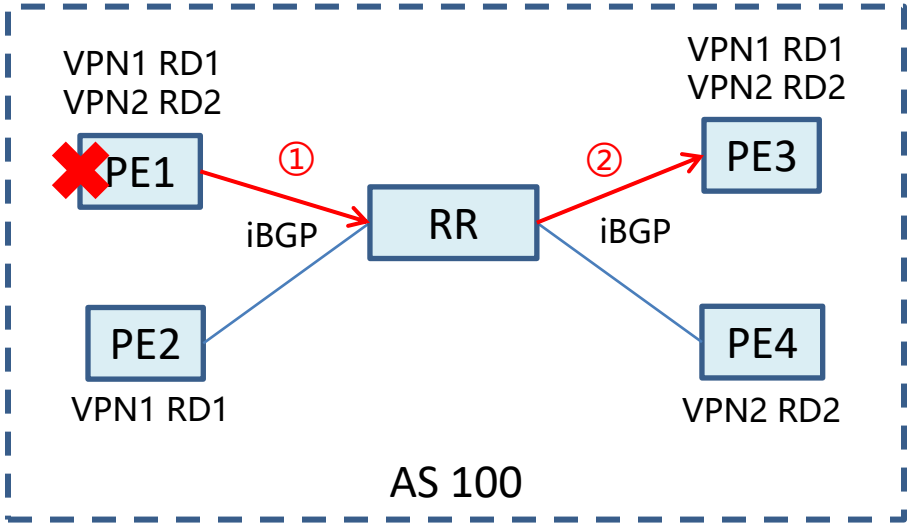

When the VRF of VPN1 in PE1 no longer overflows:

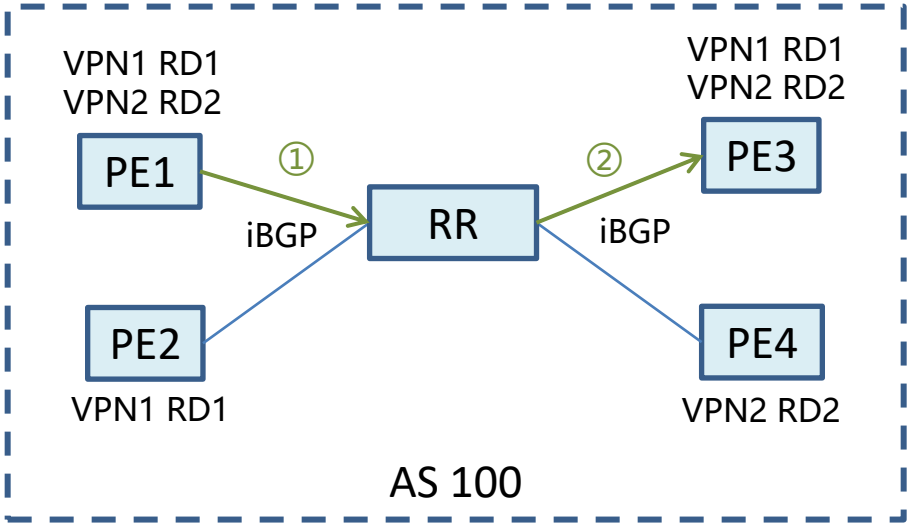

RD-ORF Solution in Single-domain

① PE1 generates a BGP ROUTE-REFRESH message contains a RD-ORF entry, and send it to RR;

- RR checks the RD-ORF entry and add the RD-ORF entry into its Adj-RIB-out;

② RR regenerates a BGP ROUTE-REFRESH message to send this RD-ORF entry to PE3;

- PE3 checks the RD-ORF entry and add the RD-ORF entry into its Adj-RIB-out.

① PE1 generates a BGP ROUTE-REFRESH message contains a RD-ORF entry, and send it to RR;

- RR checks the RD-ORF entry and remove the associated RD-ORF entry from its Adj-RIB-out;

② RR regenerates a BGP ROUTE-REFRESH message to send this RD-ORF entry to PE3;

- PE3 checks the RD-ORF entry and remove the associated RD-ORF entry from its Adj-RIB-out

Solution – RD-ORF (Option B & Option C)

When the VRF of VPN1 in PE1 overflows:

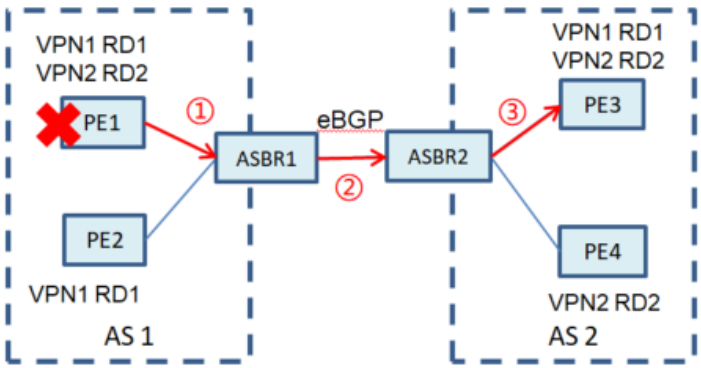

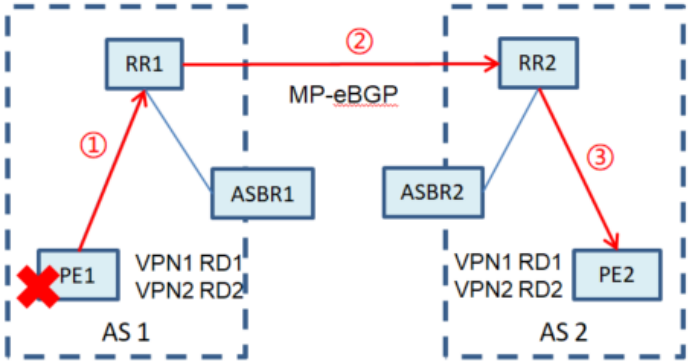

When the VRF of VPN1 in PE1 no longer overflows:

RD-ORF Solution in Option B scenario

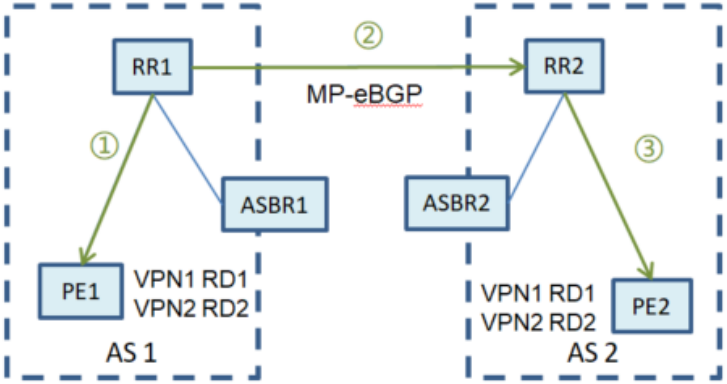

RD-ORF Solution in Option C scenario

RD-ORF is sent from PE1 to PE3 via ASBR1 and ASBR2.

RD-ORF sends from PE1 to PE2 via RR1 and RR2.

Further Action

- Comments?
- Adopt as WG document?

wangw36@chinatelecom.cn
wangaj3@chinatelecom.cn
zhuangshunwan@huawei.com
jie.dong@huawei.com
rainsword.wang@huawei.com
IETF108@Spain