In-Place Bandwidth Update for MPLS RSVP-TE LSPs

draft-alibee-teas-rsvp-inplace-lsp-bw-update-02
IETF 124 - Montreal

Zafar Ali, Cisco Systems
Vishnu Pavan Beeram (Ed), HPE
Peter Schoenmaker, Meta

Introduction

- Sections 2.5 and 4.6.4 of [RFC3209] describe the RSVP signaling procedure for increasing the bandwidth of an MPLS TE tunnel using a make-before-break (MBB) operation.
  - Frequent MBB events can cause a considerable amount of signaling and label programming churn in the network.
- In-Place LSP Bandwidth Update:
  - Reduces the amount of signaling churn.
  - Eliminates the need to reprogram labels at each transit Label Switch Router (LSR) along the path of the LSP and shift traffic at the ingress Label Edge Router (LER) from one LSP instance to another.
- This document describes how an implementation can leverage the in-place LSP bandwidth update mechanism for increasing/decreasing the bandwidth of the TE tunnel.
  - Scope: Point-to-point MPLS RSVP-TE tunnels.

Signaling In-Place LSP Bandwidth Update: Successful Sequence

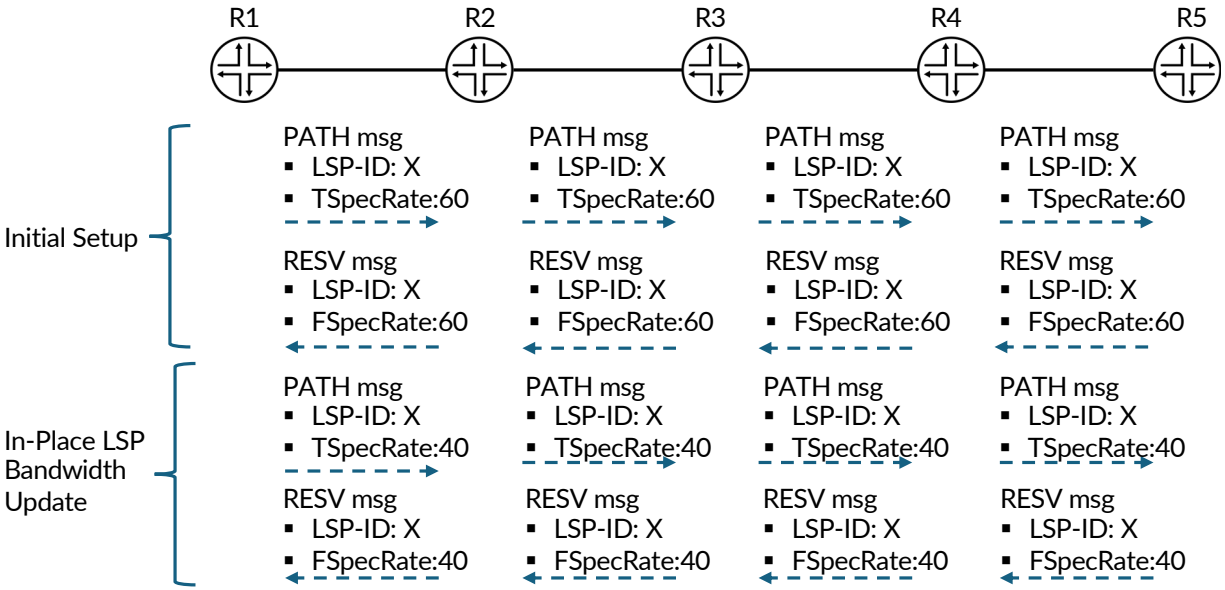

- In the signaling sequence used for initial setup, the LSP is signaled with a bandwidth of 60 Mbps.
- In the in-place update signaling sequence, the same LSP instance, with no change to the LSP_ID in the SENDER_TEMPLATE object, is signaled with a bandwidth of 40 Mbps.
- When the ingress LER receives a RESV with 40Mbps encoded in the FLOWSPEC object, the in-place LSP bandwidth update signaling sequence is deemed successful.

Signaling In-Place LSP Bandwidth Update: Failed Sequence

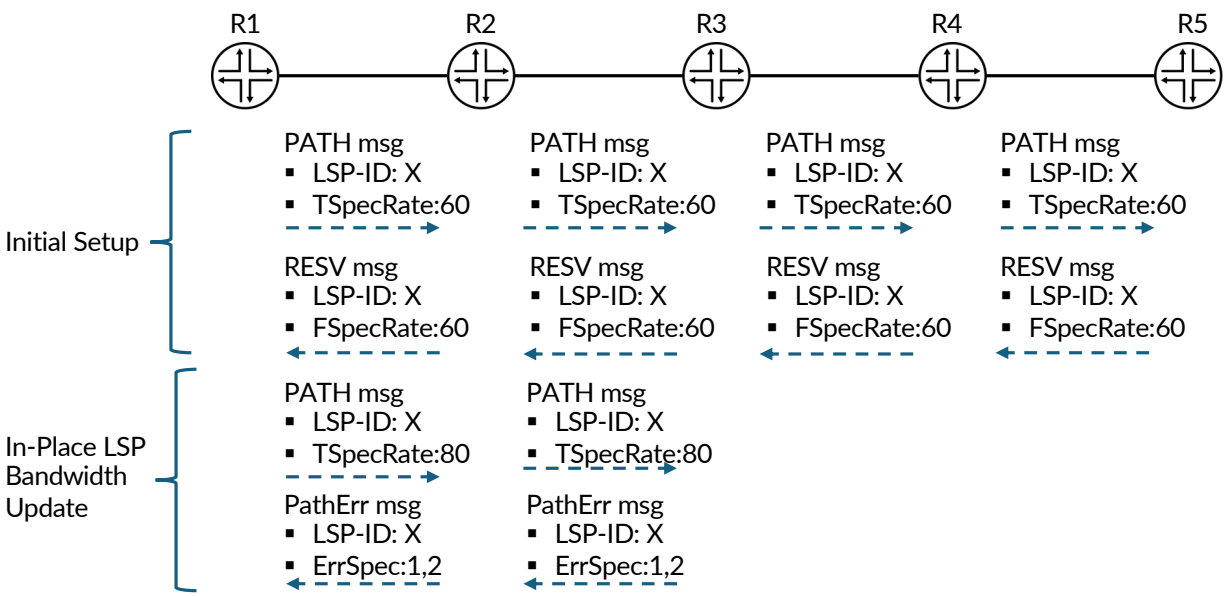

- In the signaling sequence used for initial setup, the LSP is signaled with a bandwidth of 60 Mbps.
- In the in-place update signaling sequence, the same LSP instance, with no change to the LSP_ID in the SENDER_TEMPLATE object, is signaled with a bandwidth of 80 Mbps.
- Node R3 fails admission control and sends a PathErr; When the ingress LER receives a PathErr in response to an in-place LSP bandwidth update request, the in-place LSP bandwidth update signaling sequence is deemed a failure.
- Another scenario in which the in-place LSP update signaling sequence is deemed a failure is when the ingress does not receive either a RESV or a PATHErr within a reasonable interval.
- In failed scenarios, the onus is on the ingress LER to reroute the path using MBB.

Procedure at the Ingress Node

- An ingress LER implementation that supports in-place LSP bandwidth update MAY use local policy to determine whether to trigger
  - the "in-place LSP bandwidth update" functionality (or)
  - the "MBB" procedure

- If the ingress LER is mandated by local policy to use in-place LSP bandwidth update, it SHOULD do the following when there is a need to update the bandwidth of the TE tunnel:
  - Compute and check if the current signaled TE path can accommodate the new bandwidth:

(Cont..)

(Cont..)

  - If the current TE path cannot accommodate the new bandwidth, compute a TE path that accommodates the new bandwidth and initiate MBB signaling procedure.
  - If the current TE path can accommodate the new bandwidth, initiate in-place LSP bandwidth update signaling.
    - If signaling succeeds, consider the bandwidth update procedure to be complete.
    - If signaling fails, compute a TE path that accommodates the desired bandwidth and initiate MBB signaling procedure.
    - If a destructive PATHErr or a ResvTear is received, initiate break-before-make signaling procedure.

Procedure at the Non-Ingress Node

- A transit LSR / egress LER implementation that supports in-place LSP bandwidth update SHOULD perform an admission control procedure when it receives an in-place LSP bandwidth update request.
- If the admission control succeeds, the transit LSR / egress LER SHOULD allow the in-place LSP bandwidth signaling sequence to complete.
- If the admission control fails, the transit LSR / egress LER:
  - SHOULD generate a non-destructive PATHErr and let the ingress LER take appropriate action.
  - SHOULD NOT initiate the teardown of the LSP instance.

Backward Compatibility

- Since the procedure for handling an in-place LSP bandwidth update request at a transit/egress node is not specified in RFC3209, a transit/egress implementation that does not support this functionality may exhibit one of the following behaviors:
  A. Teardown the signaling state associated with the LSP instance and generate appropriate destructive error and tear messages
  B. Retain the signaling state associated with the LSP instance and send an appropriate PathErr to the ingress.
  C. Silently ignore the in-place LSP bandwidth update request, which will result in the bandwidth update request getting timed out at the ingress.
- The in-place LSP bandwidth update functionality SHOULD NOT be enabled at the ingress LERs in a network with non-compliant transit/egress nodes that exhibit behavior [A].
- The functionality MAY be enabled at the ingress LERs in a network with non-compliant nodes that exhibit behavior [B] or [C].

Next Steps

- Request WG feedback.
- Discuss options to progress the draft:
  - Progress as is
  - Make “Inplace LSP BW Update” a BCP for Auto-Bandwidth deployments

Thank You

draft-alibee-teas-rsvp-inplace-lsp-bw-update@ietf.org