Wednesday 2020/04/29

Virtual-IETF 107 ROLL

Routing over Low-Power And Lossy Networks

Chairs:
Dominique Barthel
Ines Robles

Secretary:
Michael Richardson

Note Well

This is a reminder of IETF policies in effect on various topics such as patents or code of conduct. It is only meant to point you in the right direction. Exceptions may apply. The IETF's patent policy and the definition of an IETF "contribution" and "participation" are set forth in BCP 79; please read it carefully.

As a reminder:

- By participating in the IETF, you agree to follow IETF processes and policies.
- If you are aware that any IETF contribution is covered by patents or patent applications that are owned or controlled by you or your sponsor, you must disclose that fact, or not participate in the discussion.
- As a participant in or attendee to any IETF activity you acknowledge that written, audio, video, and photographic records of meetings may be made public.
- Personal information that you provide to IETF will be handled in accordance with the IETF Privacy Statement.
- As a participant or attendee, you agree to work respectfully with other participants; please contact the ombudsteam (https://www.ietf.org/contact/ombudsteam/) if you have questions or concerns about this.

Definitive information is in the documents listed below and other IETF BCPs. For advice, please talk to WG chairs or ADs:

BCP 9 (Internet Standards Process)
BCP 25 (Working Group processes)
BCP 25 (Anti-Harassment Procedures)
BCP 54 (Code of Conduct)
BCP 78 (Copyright)
BCP 79 (Patents, Participation)
https://www.ietf.org/privacy-policy/ (Privacy Policy)

Source: https://www.ietf.org/about/note-well/

Meeting Materials

- Session: Wednesday 2020/04/29
- Remote Participation
  - Etherpad: https://etherpad.ietf.org:9009/p/notes-ietf-107-roll-virtual-20200429
  - Slides: https://datatracker.ietf.org/meeting/interim-2020-roll-01/session/roll
  - Minutes taker: **Please volunteer, thank you :)**
- **Please sign blue sheets = add your name into the etherpad please :-)**

Agenda

PARTICIPANTS - BLUESHEET -		
Agenda Interim Meeting ROLL IETF 107 Wednesday, April 29, 2020 (UTC) https://etherpad.ietf.org:9009/p/notes-ietf-107-roll-virtual-20200429		
Time	Topic	Presenter
11:00 - 11:10 (10 min)	WG Status	Ines/Dominique
11:10 - 11:30 (20 min)	draft-ietf-roll-unaware-leaves	Pascal
11:30- 11:35 (5 min)	NPDAO and unaware-leaves	Rahul
11:35 - 11:40 (5 min)	Updates on AP-ND and 6BBR, state of cluster C310	Pascal
11:40 - 11:55 (15 min)	draft-ietf-roll-capabilities draft-ietf-roll-mopex	Rahul
11:55 - 12:05 (10 min)	draft-ietf-roll-nsa-extension	Aris
12:05 - 12:15 (10 min)	draft-ietf-roll-rpl-observations	Rahul
12:15 - 12:25 (10 min)	draft-papadopoulos-roll-dis-mods-use-cases	Georgios
12:25 - 12:35 (10 min)	draft-ietf-roll-enrollment-priority	Michael
12:35 - 12:45 (10 min)	draft-thubert-roll-eliding-dio-information	Pascal
12:45 - 13:00 (15 min)	Open Floor	Everyone

Milestones

Milestones

Date	Milestone
Dec 2020	Initial submission of Mode of Operation extension and Capabilities for RPL to the IESG draft-ietf-roll-mopex-cap
Oct 2020	Recharter WG or close
Jul 2020	Initial submission of a root initiated routing state in RPL to the IESG draft-ietf-roll-dao-projection
Jul 2020	Initial submission of a YANG model for MPL to the IESG draft-ietf-roll-mpl-yang
Jun 2020	Initial submission of Enabling secure network enrollment in RPL networks draft to the IESG draft-ietf-roll-enrollment-priority
Jun 2020	Initial submission of a proposal to augment DIS flags and options to the IESG draft-ietf-roll-dis-modifications
Jun 2020	Initial submission of a proposal for Source-Route Multicast for RPL to the IESG draft-ietf-roll-ccast
Mar 2020	Initial submission of Common Ancestor Objective Functions and Parent Set DAG Metric Container Extension to the IESG draft-ietf-roll-nsa-extension
Mar 2020	Initial submission of a reactive P2P route discovery mechanism based on AODV-RPL protocol to the IESG draft-ietf-roll-aodv-rpl
Mar 2020	Initial Submission of a proposal with uses cases for RPI, RH3 and IPv6-in-IPv6 encapsulation to the IESG draft-ietf-roll-useofrplinfo

Done milestones

Date	Milestone
Done	Initial submission to the IESG of mechanism to turn on RFC8138 compression feature within a RPL network draft-ietf-roll-turnon-rfc8138
Done	Initial submission of routing for RPL Leaves draft to the IESG draft-ietf-roll-unaware-leaves
Done	Initial submission of a solution to the problems due to the use of No-Path DAO Messages to the IESG draft-ietf-roll-efficient-npdao

State of Active Internet-Drafts

Draft	Status
draft-ietf-roll-aodv-rpl-07	AD Evaluation::Revised I-D Needed
draft-ietf-roll-capabilities-03	Discussion today
draft-ietf-roll-dao-projection-09	Work in progress
draft-ietf-roll-dis-modifications-01	Stand By
draft-ietf-roll-efficient-npdao-18	RFC Ed Queue - New version - Discussed today
draft-ietf-roll-enrollment-priority-02	Discussion today
draft-ietf-roll-mopex-00	Discussion today
draft-ietf-roll-nsa-extension-08	Discussion today
draft-ietf-roll-rpl-observations-03	Discussion today
draft-ietf-roll-turnon-rfc8138-07	Submitted to the IESG
draft-ietf-roll-unaware-leaves-15	Submitted to the IESG
draft-ietf-roll-useofrplinfo-38	Last modification done - v39 to come

State of Active Internet-Drafts

Draft	Status
Draft-ietf-roll-mpl-yang-02 (Expired)	To be continued
Draft-ietf-roll-bier-ccast-01 (Expired)	To be continued

Related Internet-Drafts

Draft	Status
draft-papadopoulos-roll-dis-mods-use-cases-00	Discussion today
draft-thubert-roll-eliding-dio-information-04	
draft-baraq-roll-lbsa-00	No discussion initiated so far
draft-jadhav-roll-storing-rootack-00	No discussion initiated so far

Open tickets

https://github.com/roll-wg/efficient-route-invalidation/issues

roll-wg / **efficient-route-invalidation**

Code | Issues 1 | Pull requests 0 | Ac

Filters | is:issue is:open

1 Open | 0 Closed

RPL Status Code of 130 is incorrect
#4 opened on Nov 26, 2019 by nyrahul

https://github.com/roll-wg/Capabilities/issues

roll-wg / **Capabilities**

Code | Issues 6 | Pull requests 0 | Actions | Projects 0 | Wiki

Filters | is:issue is:open

6 Open | 1 Closed | Author | Label

New Options and backward compatibility problem
#11 opened 9 days ago by nyrahul

Capabilities for turnon-8138, P-DAO needs draft-update
#6 opened on Nov 22, 2019 by nyrahul

Global and Local CAPs needs draft-update
#5 opened on Nov 21, 2019 by nyrahul

difference in Configuration Option, MOP, Capability needs draft-update
#4 opened on Aug 30, 2019 by nyrahul

Add scenario for capabilities exchange needs draft-update
#3 opened on Aug 25, 2019 by nyrahul

Is Caps optional to be supported by nodes? needs draft-update
#1 opened on Aug 25, 2019 by nyrahul

roll-wg / **rpl-observations**

Code | Issues 4 | Pull requests 0 | Actions | Projects 0 | Wiki

Filters | is:issue is:open

4 Open | 3 Closed | Author | Label

Parent Address MUST be empty in Transit Information for storing MOP
#10 opened on Mar 16 by nyrahul

Implications of using smaller lollipop counter window
#9 opened on Dec 12, 2019 by nyrahul

Path Control bits handling
#6 opened on Nov 12, 2019 by nyrahul

DIS multicast handling issue IETF104
#2 opened on Mar 25, 2019 by nyrahul

https://github.com/roll-wg/rpl-observations/issues

Open tickets

https://github.com/roll-wg/draft-ietf-roll-enrollment-priority/issues

roll-wg / **draft-ietf-roll-enrollment-priority**

Code | Issues 1 | Pull requests 0 | Actions

Filters | is:issue is:open

1 Open | 0 Closed

nits to fix and complete the TODO section
#1 opened on Nov 16, 2019 by inesrob

https://github.com/roll-wg/dao-projection/issues

roll-wg / **dao-projection**

Code | Issues 5 | Pull requests 1 | Actions | Projects 0 | Wiki | Security

Filters | is:issue is:open | Label

5 Open | 1 Closed | Author | Label | Projects

Issues to address in dao projection draft (lifetime, MOP, retransmissions, route cleanup)
#7 opened on Nov 15, 2019 by inesrob

Security considerations for dao projection
#6 opened on Nov 15, 2019 by inesrob

should DAO projection have a new MOP?
#5 opened on Oct 28, 2019 by mcr

Information Missing in VIO abbreviation
#3 opened on Oct 27, 2019 by rabinsahoo

cleanup handling of common network segment for two P-DAO
#2 opened on Dec 16, 2018 by nyrahul

Open tickets

Ticket	Summary	Component
#179	Security considerations for dao projection	dao-projection
#180	13 issues to address in dao projection draft (lifetime, MOP, retransmissions, route cleanup)	dao-projection
#187	New version of RFC6550 - Topics to include	rpl
#188	Should 6LBR be included into the DODAG root?	rpl
#194	Clarification of AODV-RPL in scope of RPL	aodv-rpl
#195	AODV-RPL should be Experimental?	aodv-rpl
#196	AODV-RPL is Replacing rfc6997?	aodv-rpl
#197	AODV-RPL link checks - definition needed	aodv-rpl
#198	Nits needed to be addressed	aodv-rpl

https://trac.ietf.org/trac/roll/report/2

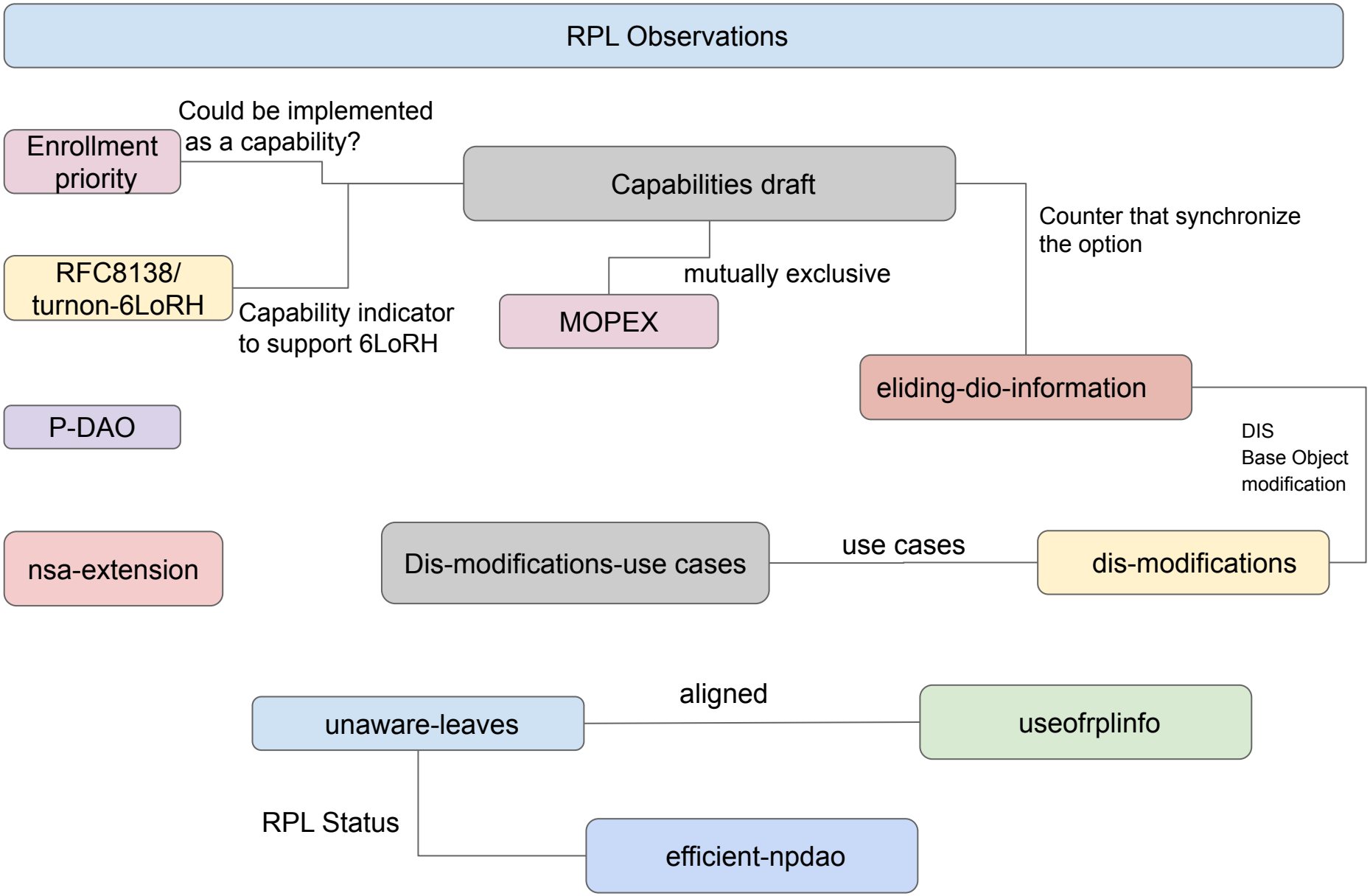
RPL Observations
Enrollment priority
Could be implemented as a capability?
Capabilities draft
RFC8138/ turnon-6LoRH
Capability indicator to support 6LoRH
mutually exclusive
MOPEX
Counter that synchronize the option
eliding-dio-information
P-DAO
DIS Base Object modification
nsa-extension
Dis-modifications-use cases
use cases
dis-modifications
unaware-leaves
aligned
useofrplinfo
RPL Status
efficient-npdao

RPL Unaware Leaves

draft-ietf-roll-unaware-leaves

Pascal Thubert

IETF 107

ROLL Virtual Meeting

Status to the draft

- Moved from 06 to 15 since last IETF
- WG progress
- Aligning to use of RPL Info
- WGLC reviews

Major changes

- Improved description of RFC 8505
- Aligned to UseOfRPLInfo (section 6.2)
- Including expected support by RUL (HbH and SRH)
- Added description of 6CIO (RFC 7400)
- New "Root Proxies EDAR/EDAC" (P) Flag in RPL Config
- Added flows for registration termination
- A **lot** of editorial additions and precisions

Storing-Mode Overhead (RAN)

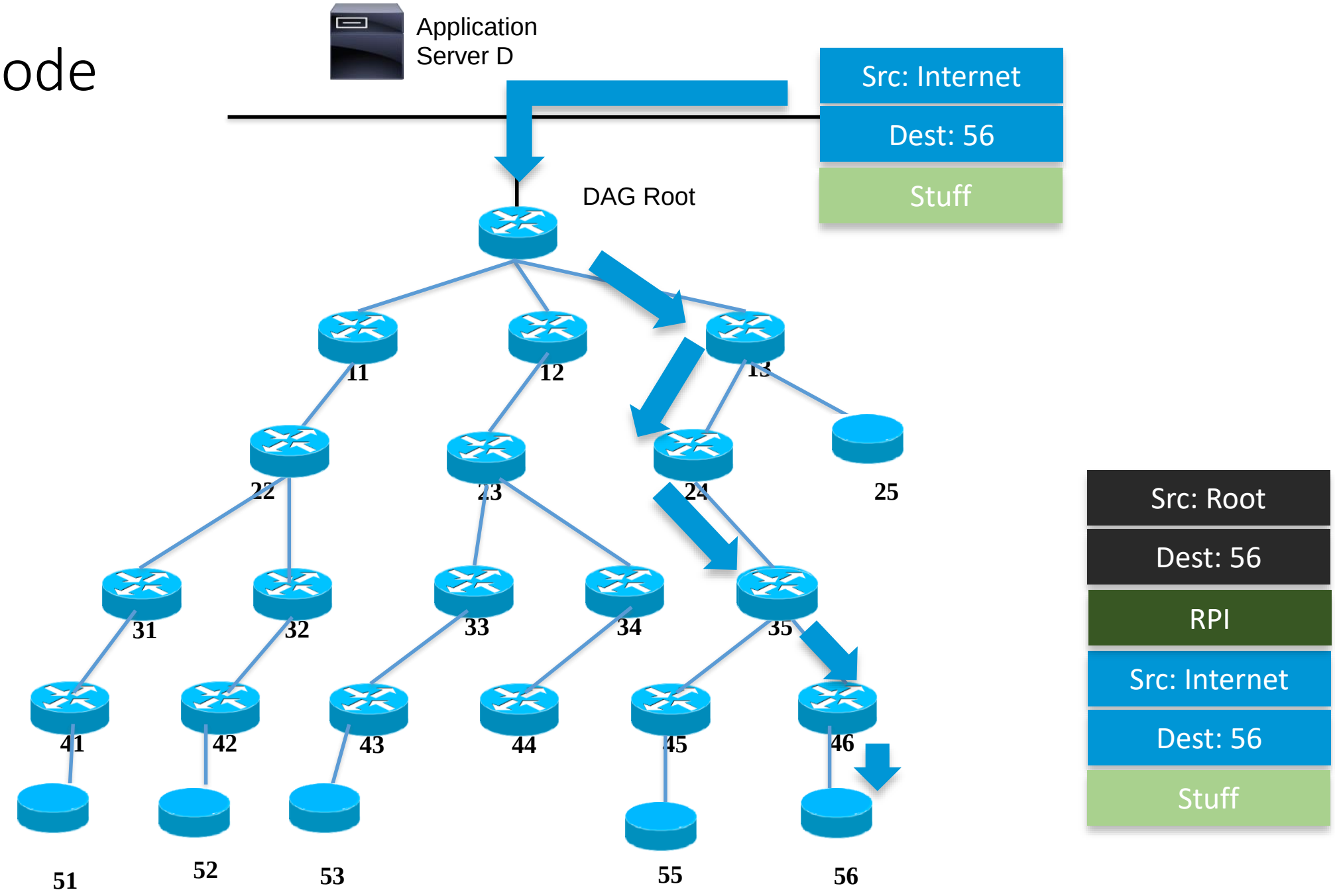

Non-Storing Mode overhead (RAN)

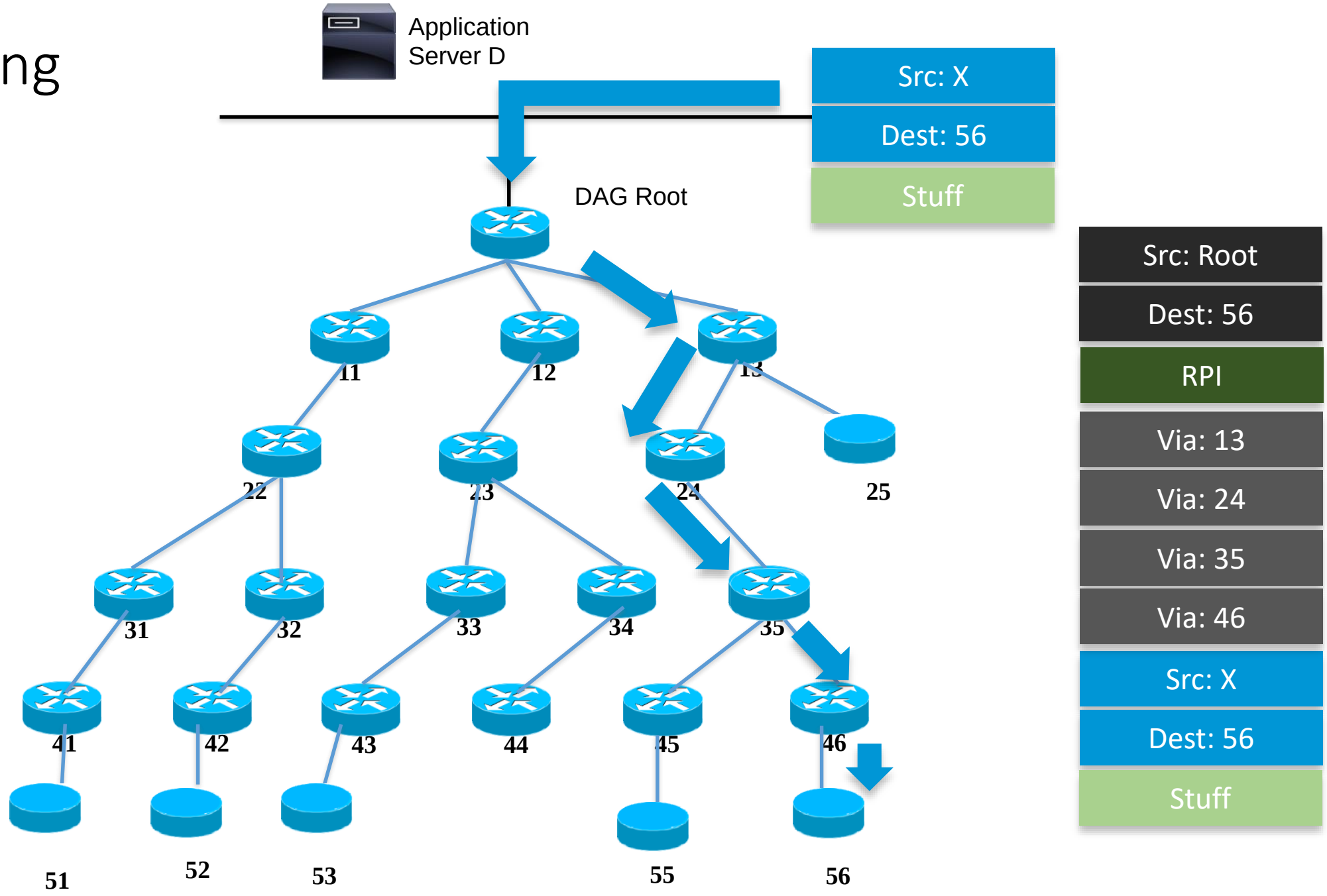

Storing-Mode Routing stretch (RAN)

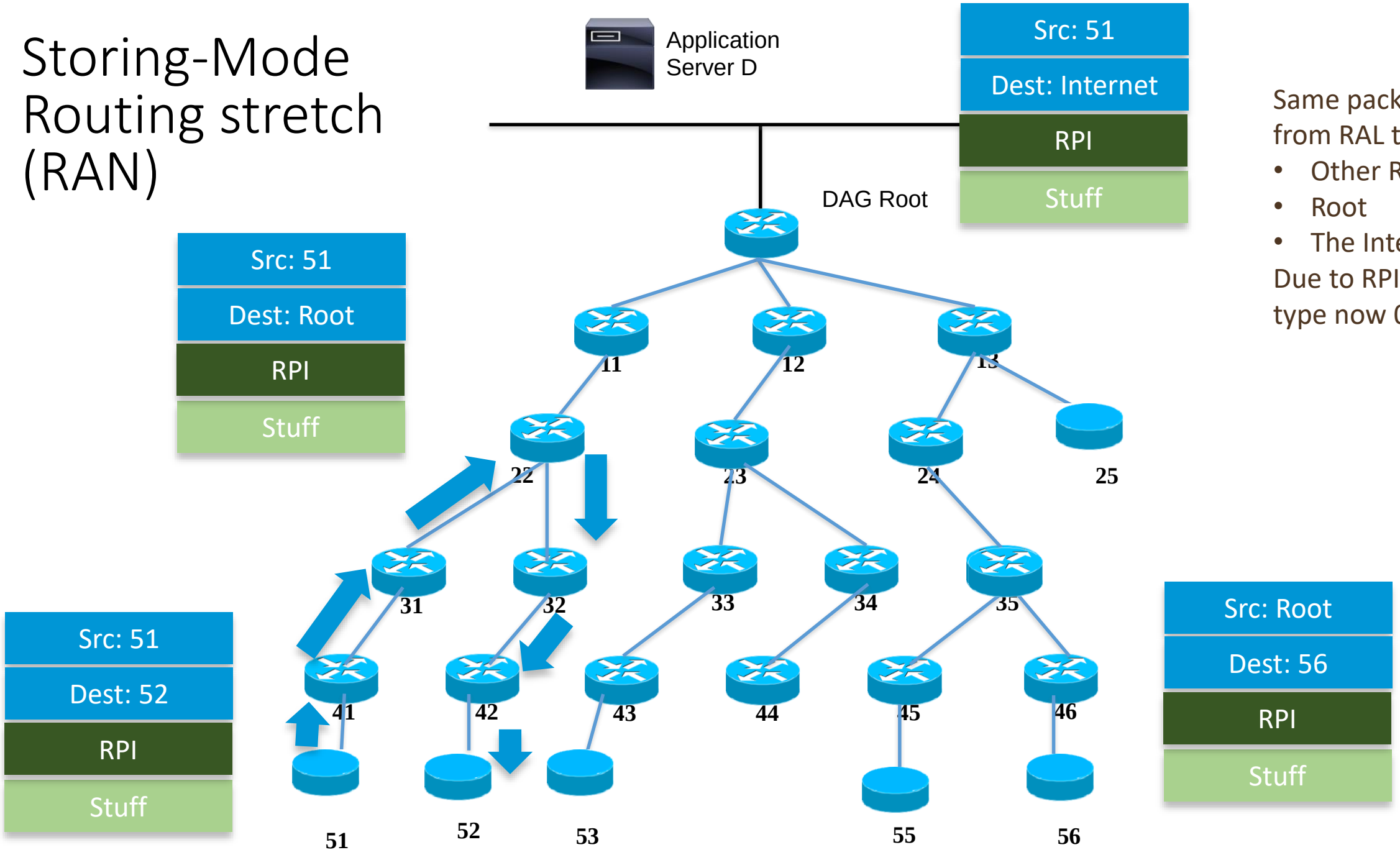

Same packet format from RAL to:

- Other RAL
- Root
- The Internet

Due to RPI option type now 0x23

Non-Storing Routing stretch (RAN)

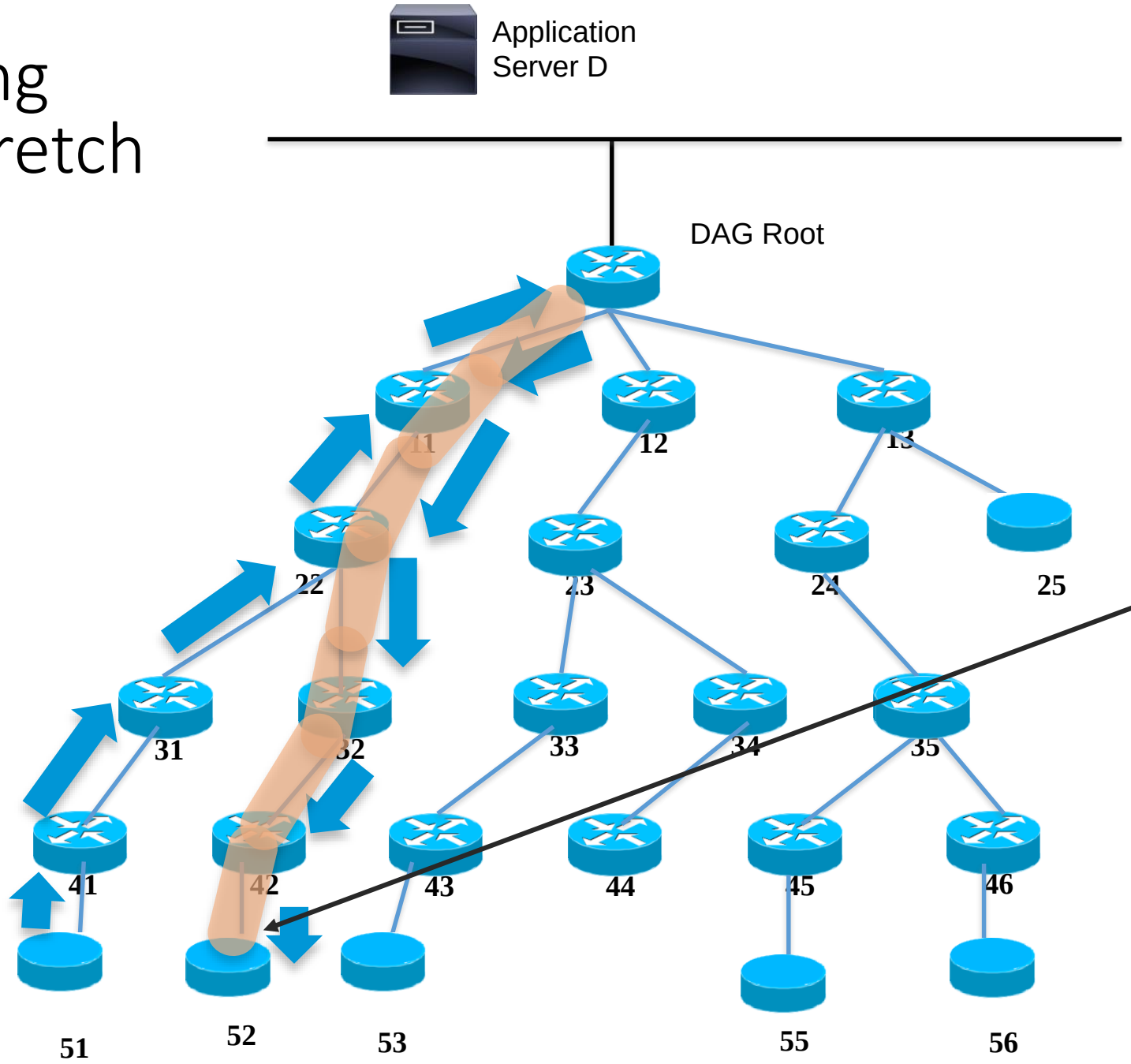

Src: 51
Dest: 52
RPI
Stuff

Src: Root
Dest: 52
RPI
Via: 11
Via: 22
Via: 32
Via: 42
Src: X
Dest: 52
RPI
Stuff

Non-Storing Routing stretch Alt (RAN)

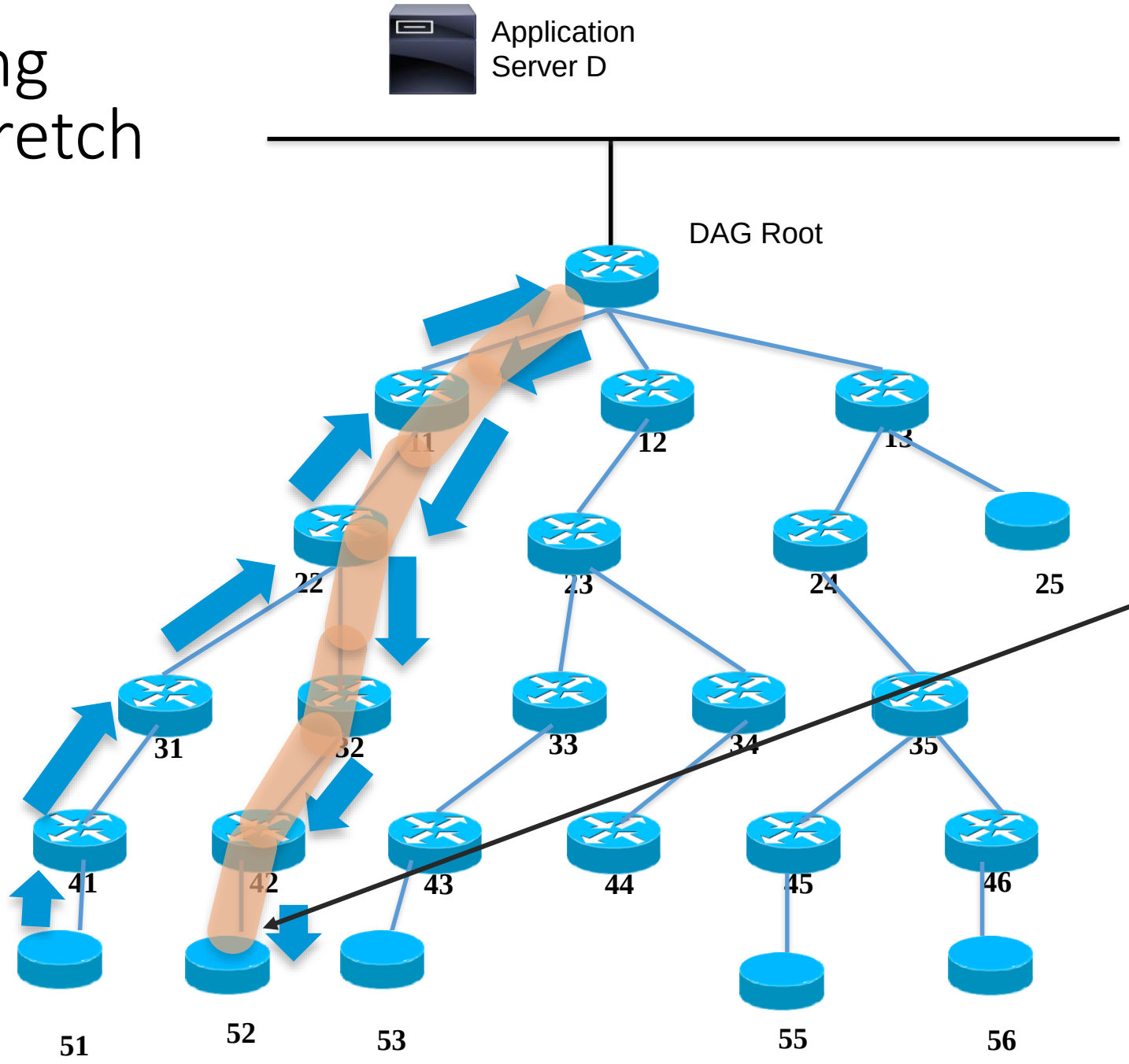

Src: 51
Dest: Root
RPI
Src: 51
Dest: 52
Stuff

Src: Root
Dest: 52
RPI
Via: 11
Via: 22
Via: 32
Via: 42
Src: X
Dest: 52
Stuff

Any Mode from RUL To *

Application Server D

Src: 51
Dest: Internet
Stuff

DAG Root

Src: 41
Dest: Root
RPI
Src: 51
Dest:
Stuff

Src: 51
Dest:
Stuff

11 12 13 22 23 24 25 31 32 33 34 35 41 42 43 44 45 46 51 52 53 55 56

e.g. Storing to RAN

Src: Root
Dest: 56
RPI
Src: 51
Dest: 56
Stuff

Storing Mode To RUL

RUL addresses injected in non-storing mode so packet flies to the Root which encapsulated

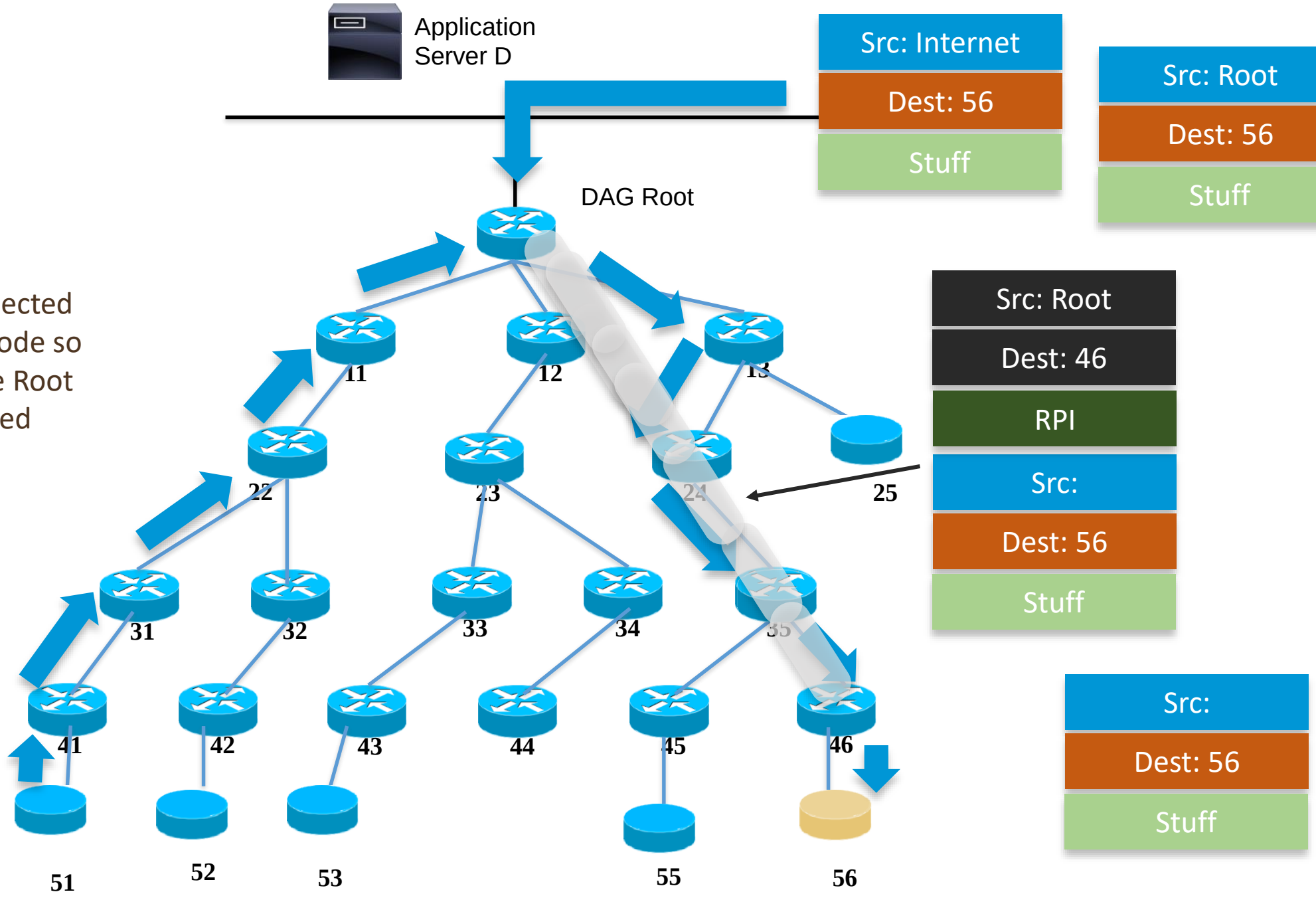

Storing Mode To RUL (Alt)

RUL addresses injected in non-storing mode so packet flies to the Root which encapsulated

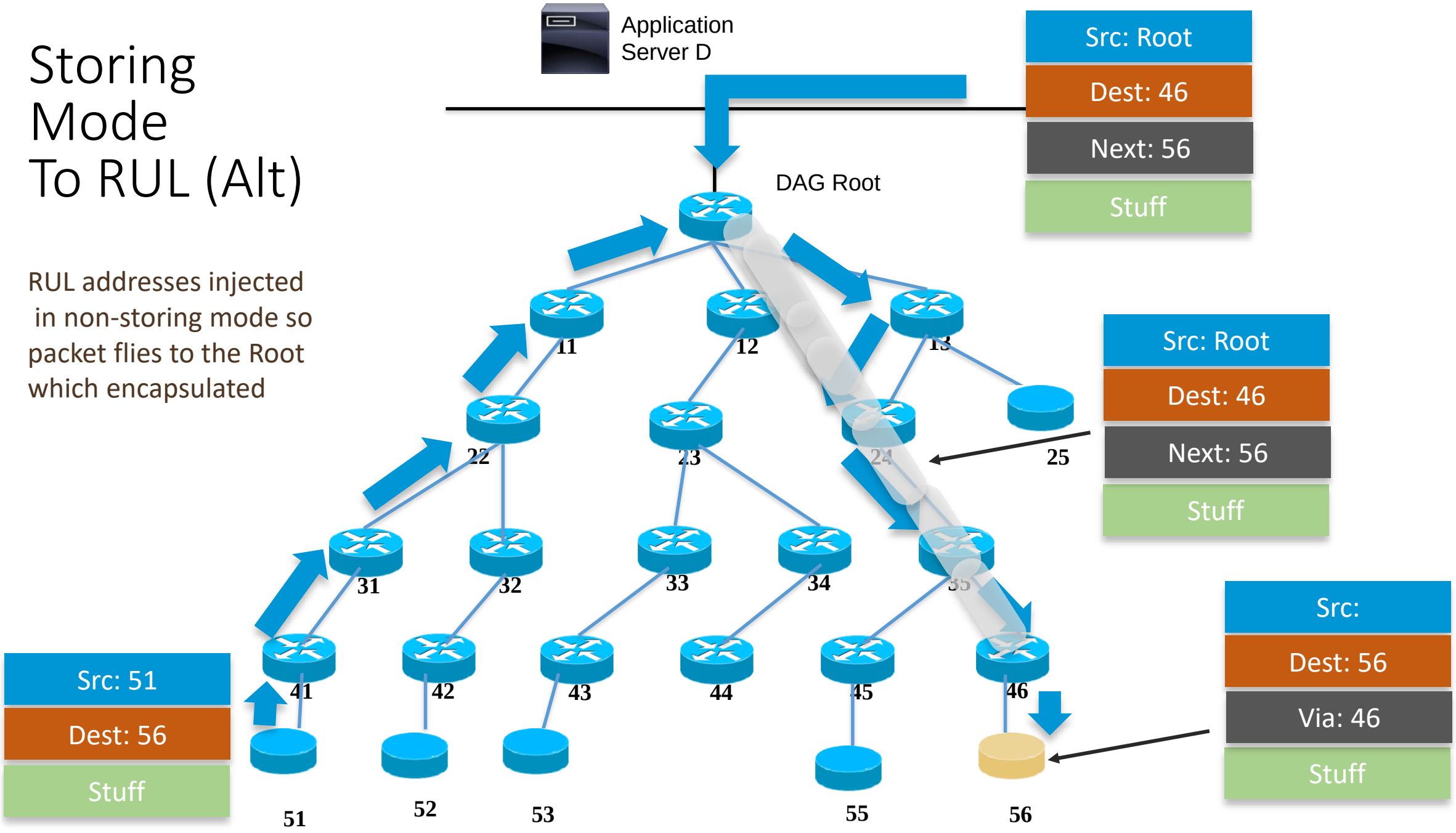

Non-Storing Mode To RUL

RUL addresses injected in non-storing mode so packet flies to the Root which encapsulated

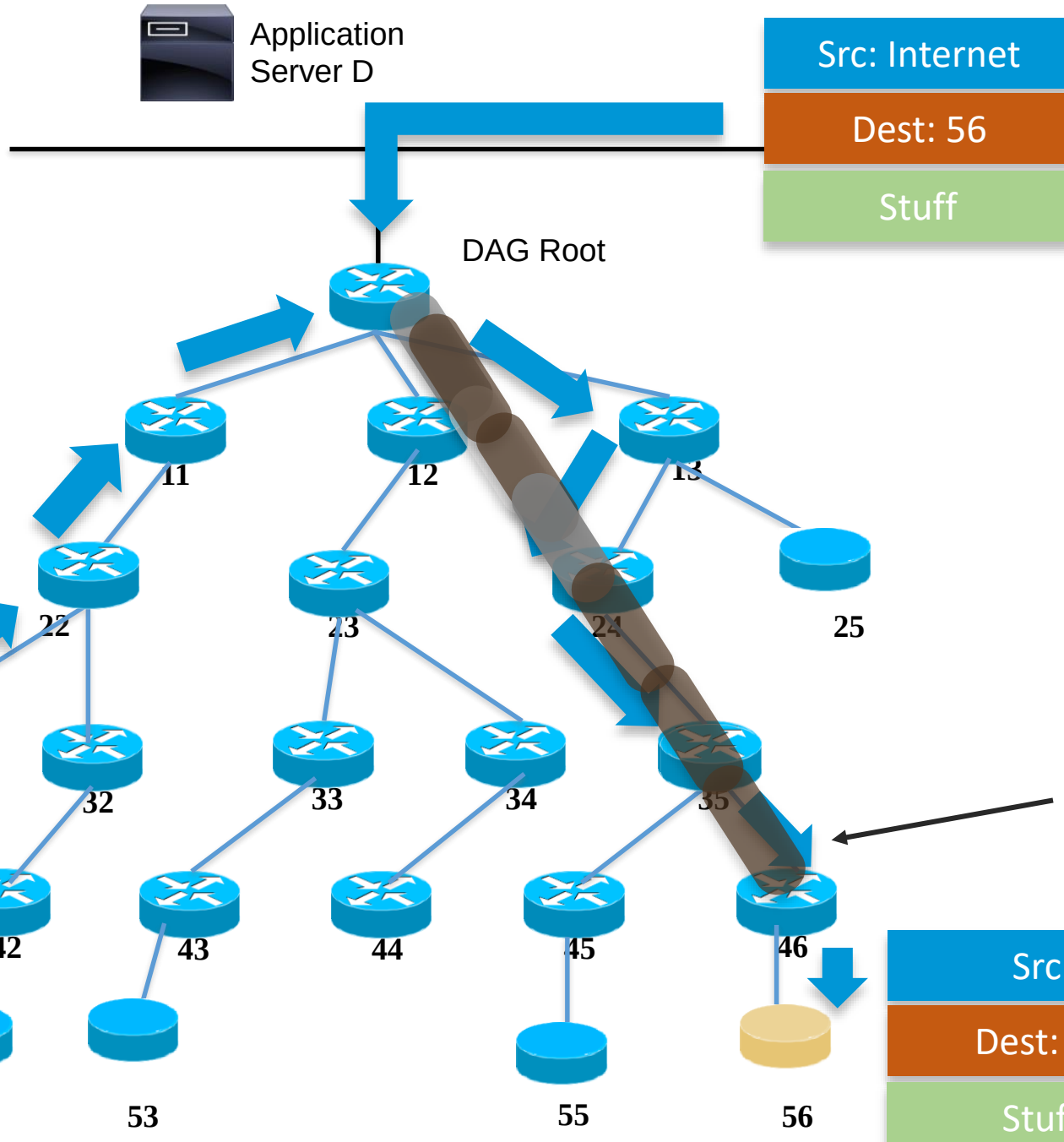

Src: Internet
Dest: 56
Stuff

Src: Root
Dest: 56
Stuff

Src: Root
Dest: 46
RPI
Via: 13
Via: 24
Via: 35
Src:
Dest: 56
Stuff

Src: 51
Dest: 56
Stuff

Src:
Dest: 56
Stuff

DCO status

draft-ietf-roll-efficient-npdao-18

- Rahul (IETF 107)

Updates

This document specifies a change in the Transit Information Option to contain the "Invalidate previous route" (I) flag. This 'I' flag signals the common ancestor node to generate a DCO on behalf of the target node with a RPL Status of 195 indicating that the address has moved. The 'I' flag is carried in the Transit Information Option which augments the reachability information for a given set of RPL Target(s). Transit Information Option with 'I' flag set should be carried in the DAO message when route invalidation is sought for the corresponding target(s).

Value 195 represents 'E' and 'A' bit in RPL Status to be set as per Figure 3 of [I-D.ietf-roll-unaware-leaves] with the lower 6 bits with value 3 indicating 'Moved' as per Table 1 of [RFC8505].

Why 195?

DCO

RPL Status = 195

1 1 0 0	0 0 1 1

```
 0
 0 1 2 3 4 5 6 7
+-+-+-+-+-+-+-+-+
|E|A|  Value    |
+-+-+-+-+-+-+-+-+
```

Figure 3: RPL Status Format

unaware-leaves

RFC 8505 Table 1

Value	Description
0-2	As defined in [RFC6775]. Note: A Status value of 1 ("Duplicate Address") applies to the Registered Address. If the Source Address conflicts with an existing registration, "Duplicate Source Address" MUST be used.
3	Moved: The registration failed because it is not the most recent. This Status indicates that the registration is rejected because another more recent registration was done, as indicated by the same ROVR and a more recent TID. One possible cause is a stale registration that has progressed slowly in the network and was passed by a more recent one. It could also indicate a ROVR collision.

Use same Status of Moved from both RPL and 6Lo handling

Updates on AP-ND and 6BBR state of cluster C310

Pascal Thubert

IETF 107

ROLL Virtual Meeting

RFC Editor Cluster C310

- RFC Editor sorts pending publications in Clusters
- Grouping drafts with normative interdependencies
- Interdependent drafts from 6TiSCH/ROLL/6lo in C310

https://www.rfc-editor.org/cluster_info.php?cid=C310

RFCs from Cluster C310

PUB	RFC8025	draft-ietf-6lo-paging-dispatch-05.txt
PUB	RFC8138	draft-ietf-roll-routing-dispatch-05.txt
PUB	RFC8180	draft-ietf-6tisch-minimal-21.txt
PUB	RFC8655	draft-ietf-detnet-architecture-13.txt

The NP-DAO draft is waiting there

2019-07-11 | draft-ietf-roll-efficient-npdao-18.txt | MISSREF*R(1G) REF

- draft-ietf-roll-unaware-leaves NOT-RECEIVED

Authors: R. Jadhav, Ed., P. Thubert, R. Sahoo, Z. Cao

Title: "Efficient Route Invalidation"

Bytes: 55789

Working Group: Routing Over Low power and Lossy networks

Use of RPL info is waiting there as well

2019-07-11 | draft-ietf-roll-useofrplinfo-38.txt | IESG
Authors: M. Robles, M. Richardson, P. Thubert
Title: "Using RPL Option Type, Routing Header for Source Routes and IPv6-in-IPv6 encapsulation in the RPL Data Plane"
Bytes: 128736
Working Group: Routing Over Low power and Lossy networks

It can become quite complex

2019-10-30 | draft-ietf-6tisch-architecture-28.txt | MISSREF*R(1G) REF

- draft-ietf-6tisch-minimal-security MISSREF*R(1G)
- draft-ietf-6lo-backbone-router EDIT
- draft-ietf-6lo-fragment-recovery EDIT*R
- draft-ietf-6lo-minimal-fragment EDIT
- draft-ietf-6lo-ap-nd EDIT*A
- draft-ietf-roll-useofrplinfo IESG
- draft-ietf-roll-unaware-leaves NOT-RECEIVED
- draft-ietf-6tisch-enrollment-enhanced-beacon MISSREF*R(2G)
- draft-ietf-6tisch-msf NOT-RECEIVED

NOT RECEIVED drafts

draft-ietf-roll-unaware-leaves	Passed WGLC Norm. refs: NP DAO, AP-ND and UseOfRPLInfo
draft-ietf-6tisch-msf	*Needs a YES.* *Has a DISCUSS.* *Needs 2 more YES or NO OBJECTION positions to pass* Norm. refs: 6TiSCH Archi, Min. Security & Enhd Beacon
draft-ietf-core-stateless	On agenda of 2020-04-24 IESG telechat No Missing Reference

Apart from those 3, all normative references are contained in Cluster C310 already

Ready To Go

2019-07-11	**|**	**draft-ietf-roll-useofrplinfo-38.txt**	**|**	**IESG**
2020-03-18	**|**	**draft-ietf-6lo-ap-nd-20.txt**	**|**	**EDIT*A**
2020-03-23	**|**	**draft-ietf-6lo-backbone-router-20.txt**	**|**	**EDIT**
2020-03-23	**|**	**draft-ietf-6lo-minimal-fragment-15.txt**	**|**	**EDIT**
2020-03-24	**|**	**draft-ietf-6lo-fragment-recovery-21.txt**	**|**	**EDIT*R**

Capabilities & MOPex

draft-ietf-roll-capabilities

draft-ietf-roll-mopex

Updates

- Splitup between Capabilities and MOPex
- Capabilities draft update
  - Recommendations for adding new caps
- Specific capability instances added
  - For 6LoRH
  - For PDAO (DAO projection)
- Security Considerations
  - Still needs more work
- Added Rabi as co-author (thanks to his contributions on defining new instances)
- References fixed

MOPex

- Problem statement and requirement was already discussed on WG
  - MOPs exhausted
  - Reserving MOP=7
- Minimal document with clear motivation/proposition
- Working group adopted

RPL2: New Options and backward compatibility

- Every time a new draft introduces a new option, we have backward compatibility issue
- Problem stems from the fact that legacy nodes will strip off this new unknown option
- This is true for: Enrollment-priority, Eliding-options, NSA extensions
- Solution
  - Handle this in MOPex
  - Option type with MSB set MUST be copied. Applicable to DIO/DAO.
  - 0 to 127 → Regular Options (strip off if not understood)
  - 127 to 255 → Options to copy forward if not understood.
    - Enrollment-priority could be Option Type 127
- Does not incur any new overhead

Capabilities Updates

- How are capabilities different?
  - Compared to MOP, Configuration Option or Routing Metrics/Constraints
- Guidelines towards defining new capabilities
  - How to set Global/Info/Join-as-leaf flags?
  - How should a node handle the capability it does not support?
    - Before or After joining the instance
  - When to use and when not to use caps.

Global vs Local Capabilities

- Global capabilities
  - Only root can set and applicable for the RPL Instance
  - Intermediate 6LRs MUST copy these caps in their DIOs
  - A node may join as 6LR or 6LN depending on ‘J’ bit of the capability
    - Even if the Global capability is not understood by the node
    - This allows a Global cap to be optional for the node to understand

```
 0                   1                   2                   3
 0 1 2 3 4 5 6 7 8 9 0 1 2 3 4 5 6 7 8 9 0 1 2 3 4 5 6 7 8 9 0 1
+-+-+-+-+-+-+-+-+-+-+-+-+-+-+-+-+-+-+-+-+-+-+-+-+-+-+-+-+-+-+-+-+
|   CAPType     |J|I|G|C|.|.|.|.| CAPInfo(Opt)
+-+-+-+-+-+-+-+-+-+-+-+-+-+-+-+-+-+-+-+-+-+-+-+-+-+-+-+-+-+-+-+-+
```

New Capability: Capability Indicators

- Two types of capabilities
  - Feature, singular function either supported or not
    - Aim to group all such indicators into a single option
  - Feature with additional information
- Capability Indicators group together all singular functions
  - For e.g., 6LoRH (Note the ‘T’ flag in the below diagram)

```
 0                   1                   2                   3
 0 1 2 3 4 5 6 7 8 9 0 1 2 3 4 5 6 7 8 9 0 1 2 3 4 5 6 7 8 9 0 1
+-+-+-+-+-+-+-+-+-+-+-+-+-+-+-+-+-+-+-+-+-+-+-+-+-+-+-+-+-+-+-+-+
| Type=0x01     |J|I|G|C|. . . .|     Len=3     |. . . . . Indic|
+-+-+-+-+-+-+-+-+-+-+-+-+-+-+-+-+-+-+-+-+-+-+-+-+-+-+-+-+-+-+-+-+
|ators . . . . . . . . . . . . .|T|
+-+-+-+-+-+-+-+-+-+-+-+-+-+-+-+-+
```

New capability: Routing Resource Capability

- Useful for P-DAO

```
 0                   1                   2                   3
 0 1 2 3 4 5 6 7 8 9 0 1 2 3 4 5 6 7 8 9 0 1 2 3 4 5 6 7 8 9 0 1
+-+-+-+-+-+-+-+-+-+-+-+-+-+-+-+-+-+-+-+-+-+-+-+-+-+-+-+-+-+-+-+-+
| Type=0x03     |J|I|G|C|. . . .|     CAPLen    |  Reserved     |
+-+-+-+-+-+-+-+-+-+-+-+-+-+-+-+-+-+-+-+-+-+-+-+-+-+-+-+-+-+-+-+-+
|        Total Capacity         |
+-+-+-+-+-+-+-+-+-+-+-+-+-+-+-+-+
```

Common Ancestor Objective Function and Parent Set DAG Metric Container Extension

draft-ietf-roll-nsa-extension-08

Remous-Aris Koutsiamanis
Georgios Z. Papadopoulos
Nicolas Montavont
Pascal Thubert

ROLL@IETF107

Version -08 : updates since -04 (1)

Changes addressing feedback from Dominique, Rahul, Fabrice, Pascal, and Diego (thank you so much!)

- Lots of editorial work
  - Typos
  - Sentences rephrased for clarification
  - Added extra definitions in terminology
  - Reordered sections
    1. The 3 CA policies (Strict, Medium, Relaxed) + examples
    2. CA OF that uses policies
    3. PS NSA DIO extension

Version -08 : updates since -04 (2)

- CA OF and policies
  - 3 CA OFs → 1 CA OF with 3 (or more) policies
  - 3 OCPs → 1 OCP for 1 OF, same for all policies
  - Explained restrictiveness order of policies
    - Strict > Medium > Relaxed
    - Described as allowing control of trade-off between
      - Energy-consumption
      - Reliability
  - Explained that policies used are local to the node → nodes can use different policies

Version -08 : updates since -04 (3)

- Parent Set (PS) TLV in NSA object in DIO DAGMC
  - More details about format
    - IPv6 stored as 128bit addresses
    - One after the other, no separator
    - Address count from field size
    - Order of entries in decreasing order of preference
    - Number of reported parents left to implementation

Version -08 : updates since -04 (4)

- Use of NSA in DIO DAGMC
  - Changed usage of NSA as constraint → NSA as metric
    - Previously: as constraint requires corresponding metric
    - C=0 (Metric)
    - R=1 (Recorded because Aggregated makes no sense)
    - P=1 (Partial because each node only gets the PS of it's neighbors, not of all the nodes up to the root)
  - Highlight that NSA metric is disregarded for the purposes of rank calculation

Version -08 : updates since -04 (5)

- Security Considerations
  - PS contains addresses of neighbors' parents
  - Issues
    1. Privacy / Network discovery
    - Interceptor can see one hop beyond own neighborhood
    2. Rerouting
    - Malicious DIO sender can reroute neighbors (but already possible with fake ranks)

Road Forward

- Addressed all issues
- WGLC?

RPL-Observations

- Rahul (IETF 107)

Updates

- Added clarification with respect to “Trickle timer reset”
- Backward Compatibility issues with new RPL Control Options

DAO-ACK handling

- Briefly the problem
  - DAO-ACK is local in case of storing MOP
  - Target not aware of E2E path establishment
  - If a intermediate-6LR returns -ve DAO-ACK status, target is not informed of it.

Proposition (draft-jadhav-roll-storing-rootack)

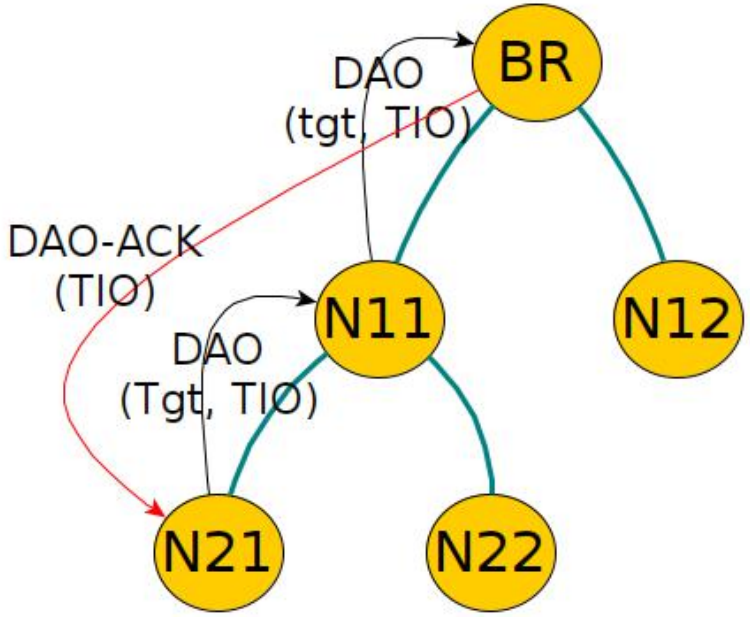

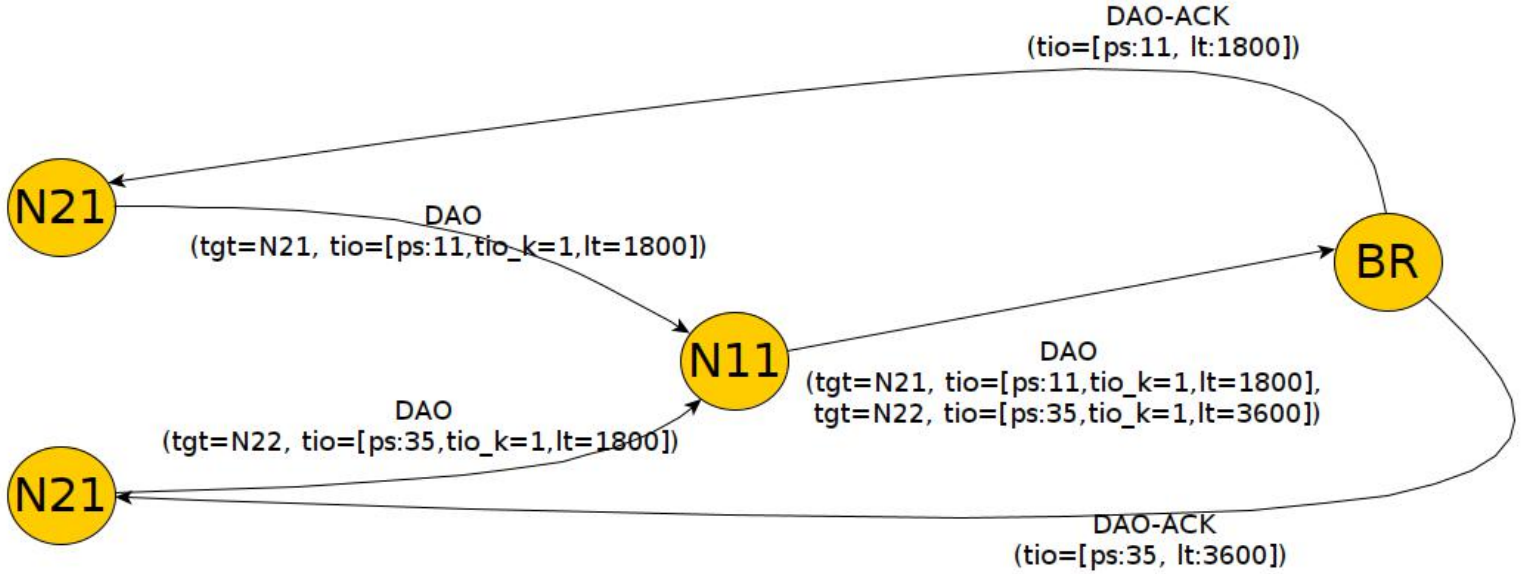

TIO = Transit Information Option

Proposition (draft-jadhav-roll-storing-rootack)

- Root sends the DAO-ACK back “directly” to target
  - *Target sets a flag in TIO to indicate Root to do this.*
- Address of target in Target Option
- Root sends TIO option in DAO-ACK
  - TIO needed for PathSequence
  - Overall, just 1-bit change in TIO

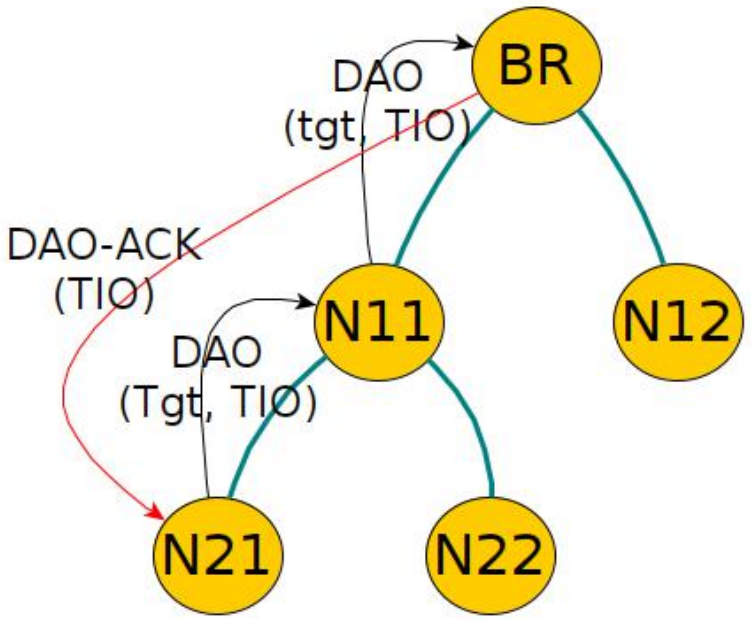


```
 0                   1                   2                   3
 0 1 2 3 4 5 6 7 8 9 0 1 2 3 4 5 6 7 8 9 0 1 2 3 4 5 6 7 8 9 0 1
+-+-+-+-+-+-+-+-+-+-+-+-+-+-+-+-+-+-+-+-+-+-+-+-+-+-+-+-+-+-+-+-+
|   Type = 0x06 | Option Length |E|K|  Flags    | Path Control  |
+-+-+-+-+-+-+-+-+-+-+-+-+-+-+-+-+-+-+-+-+-+-+-+-+-+-+-+-+-+-+-+-+
| Path Sequence | Path Lifetime |                               |
+-+-+-+-+-+-+-+-+-+-+-+-+-+-+-+-+                               +
```

TIO = Transit Information Option

Following points are considered

- Handling Target aggregation in DAO
- Handling multiple DAOs in progress with different PathSequence
- Handling prefixes in Target Option
  - How would a root know the Target address when the Target Option contains prefix?
- What happens if a intermediate-6LR sends a -ve status in DAO-ACK?
- Handling multiple preferred parents
- Runtime memory efficiency
- Incremental update possible: Root and subset of nodes can be upgraded.

Next Steps

- What's the plan?
  - DAO-ACK ... New draft in progress
- Not sure how to organize
  - DTSN handling ... best practices draft?
  - Path control bits, lollipop counters (seq-window size recommendations, restart handling, worst case scenarios)
  - Should we extend the current observations draft itself?
  - Or a new draft with all combined?

Use cases for DIS Modifications

draft-papadopoulos-roll-dis-mods-use-cases-00

Georgios Z. Papadopoulos

ROLL Interim meeting on 29th April 2020

Objective of the Draft

Identify Use Cases that prompt DIS modification

There are several drafts that request modifying the DIS:

- draft-ietf-roll-rpl-observations-03
- draft-thubert-roll-eliding-dio-information-04
- draft-ietf-roll-dis-modifications-01

Use Case: Node Joining DODAG

A smart meter being replaced in the field, while a RPL network is operating and stable.

- The meter will wait for the DIO which might take a long time if the Trickle timers have relaxed due to the steady state.
- If the meter sends a DIS, it will send in multicast, because it has no knowledge of its surroundings (inconsistency).
  - The receivers will reset their Trickle timer to the shortest period.
  - The DIOs will be sent in multicast, which will trigger energy expenditure at nearby nodes.

Potential Solution

- The DIS message may include:
  - The "***No Inconsistency***" flag set to prevent resetting of Trickle timer in responding routers.
  - The "***DIO Type***" flag set to make responding routers send unicast DIOs back.
  - A ***Response Spreading option*** based on the density of nearby routers.
  - A ***Metric Container*** listing the routing constraints that the responding routers must satisfy in order to be allowed to respond.

Use Case: Identifying Defunct DODAG

- A RPL node may remove a neighbor from its parent set for a DODAG for a number of reasons:
  - The neighbor is no longer reachable
  - The neighbor advertises an infinite rank in the DODAG
- However, a RPL node may fail to remove a neighbor:
  - The node may fail to receive the neighbor's DIOs advertising an increased rank or the neighbor's membership in a different DODAG

Use Case: Identifying Defunct DODAG

- Thus, a node would continue to consider itself attached to a DODAG even if all its parents in the DODAG are unreachable or have moved to different DODAGs.
- Such a DODAG can be characterized as being defunct from the node's perspective.
- If the node maintains state about a large number of defunct DODAGs, it may consume a considerable portion of the total memory in the node.

Potential Solution

- The DIS message has the "No Inconsistency" flag set to prevent resetting of Trickle timer in responding routers.
- A Solicited Information option to identify the DODAG in question.
  - I and D flags set
  - RPLInstanceID/DODAGID fields must be set to values identifying the DODAG.
- A Response Spreading option specifying a suitable time interval over which the DIO responses may arrive.

Use case: Adjacencies probing

To reduce the control traffic overhead, RPL uses the Trickle timer to update configuration parameters.

- However, in the absence of **regular traffic** or **L2 feedback**, the adjacencies cannot be tested and repaired if broken.
- RPL provides a mechanism in the form of unicast DIS to query a node for its DIO. A node receiving a unicast DIS must respond with a unicast DIO with Configuration Option.
- *This mechanism could as well be made use of for probing adjacencies.*

Discussion: Adjacencies probing

- Should the probing scheme be standardized (recommendations)?
  - frequency of probing depending on traffic conditions.
  - in some cases, it may be advantageous to send multicast DIO as probing response from the parent if it has several child nodes without resetting their trickle timers.
  - probing can happen in both directions, i.e., parent to child and child to parent.

Preliminary results on : draft-ietf-roll-dis-modifications-01

Configuration setup :

- Cooja – Contiki NG
- Network of 10 nodes in grid topology
- RPL
- 6TiSCH Minimal

No flags

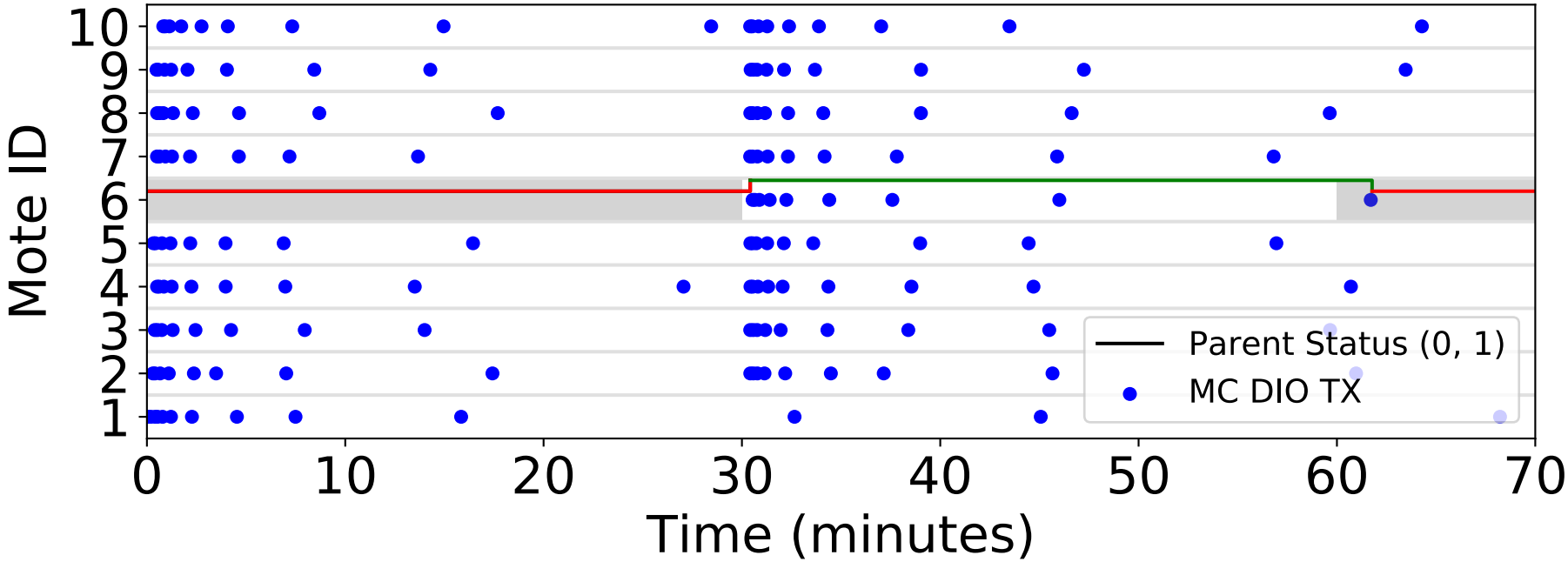
Mote ID
10
9
8
7
6
5
4
3
2
1
0
10
20
30
40
50
60
70
Time (minutes)
Parent Status (0, 1)
MC DIO TX

N flag

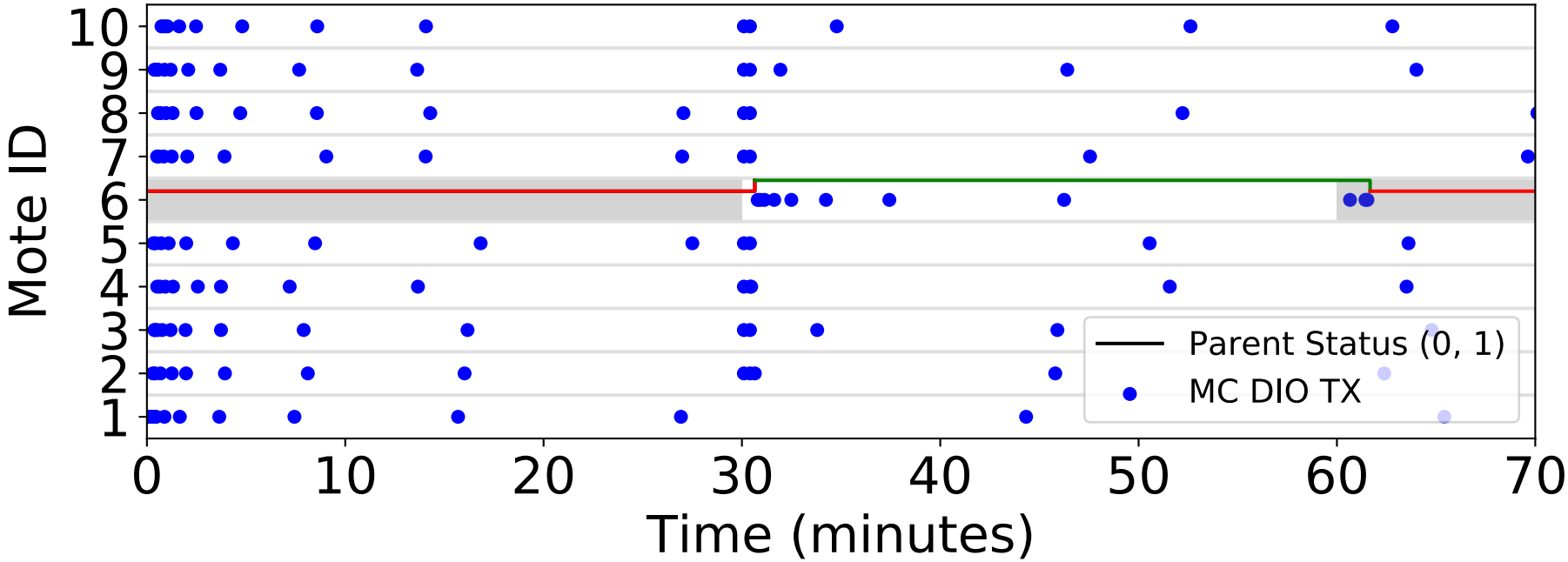
Mote ID
10
9
8
7
6
5
4
3
2
1
0
10
20
30
40
50
60
70
Time (minutes)
Parent Status (0, 1)
MC DIO TX

N flag + RS (0 – 2 seconds)

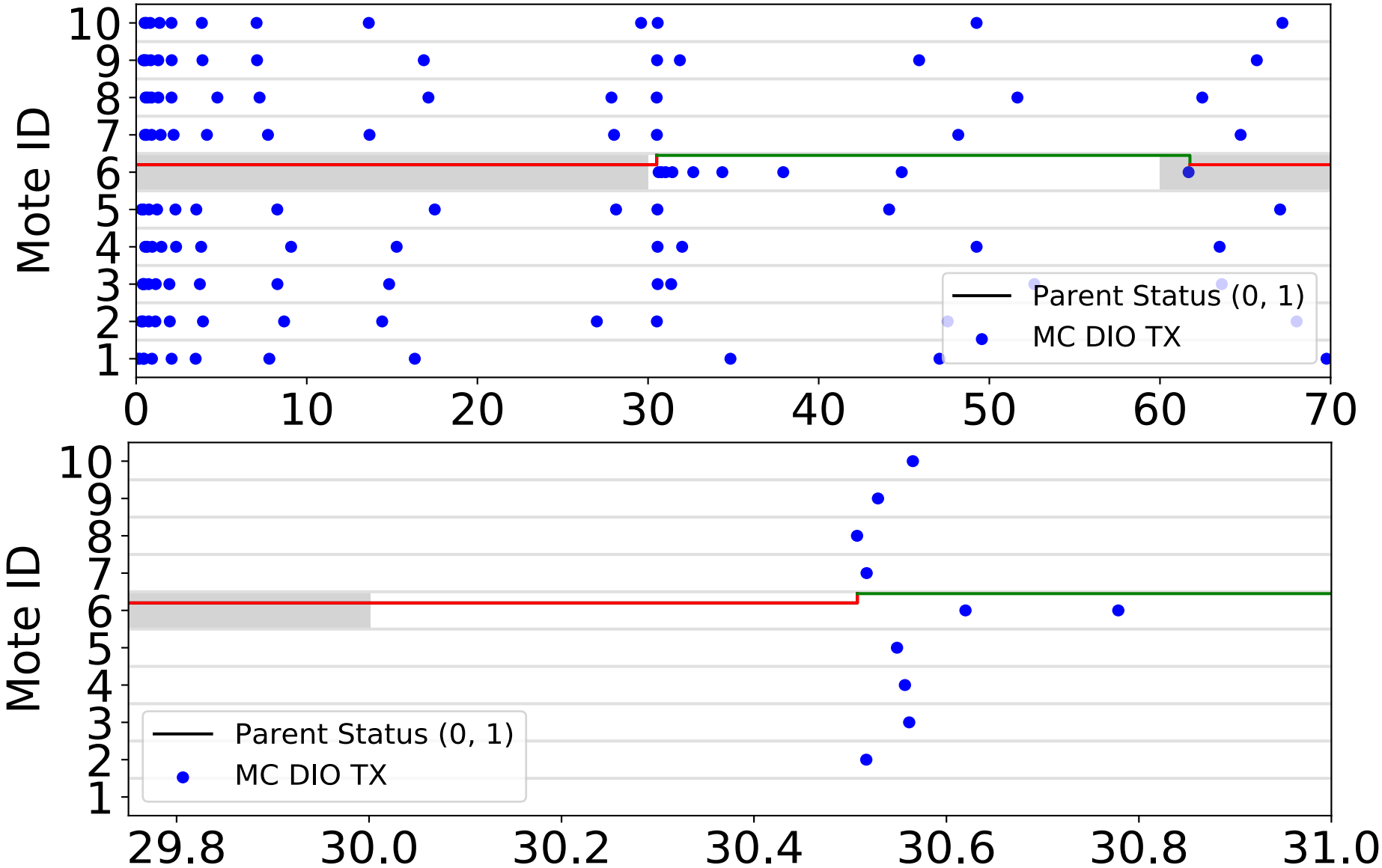

N flag + RS + MC

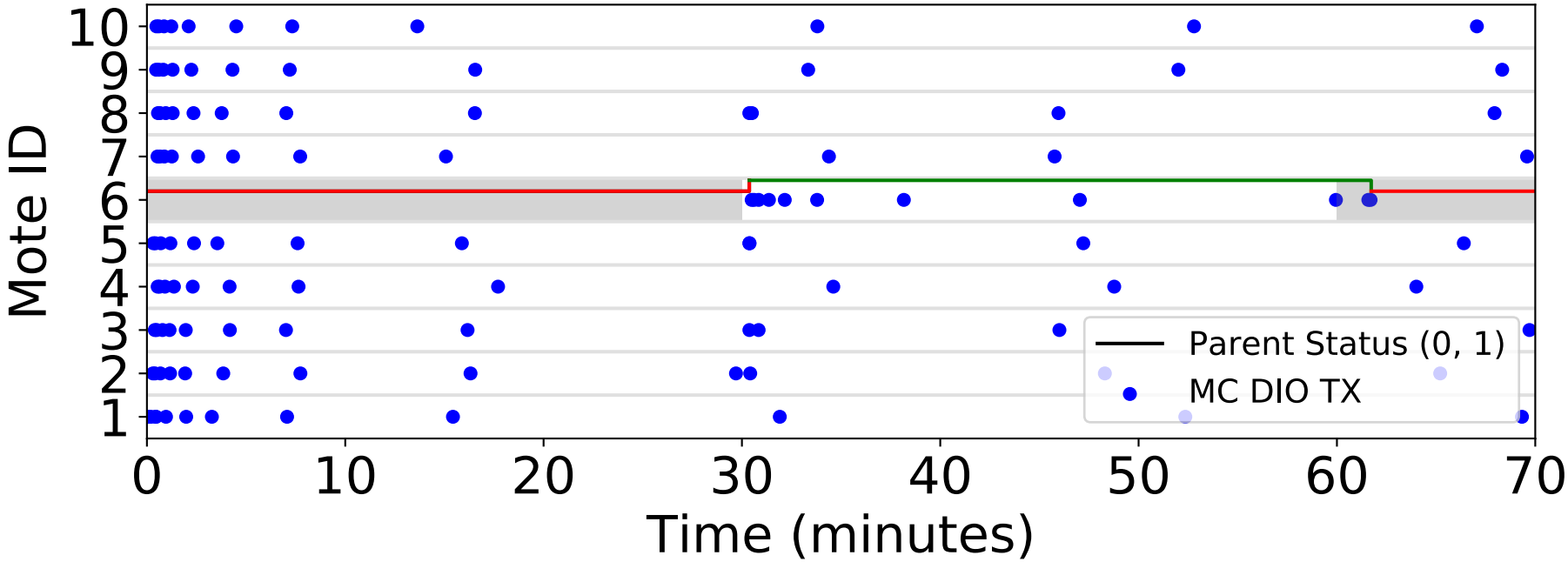
Mote ID
10
9
8
7
6
5
4
3
2
1
0
10
20
30
40
50
60
70
Time (minutes)
Parent Status (0, 1)
MC DIO TX

N + T flags

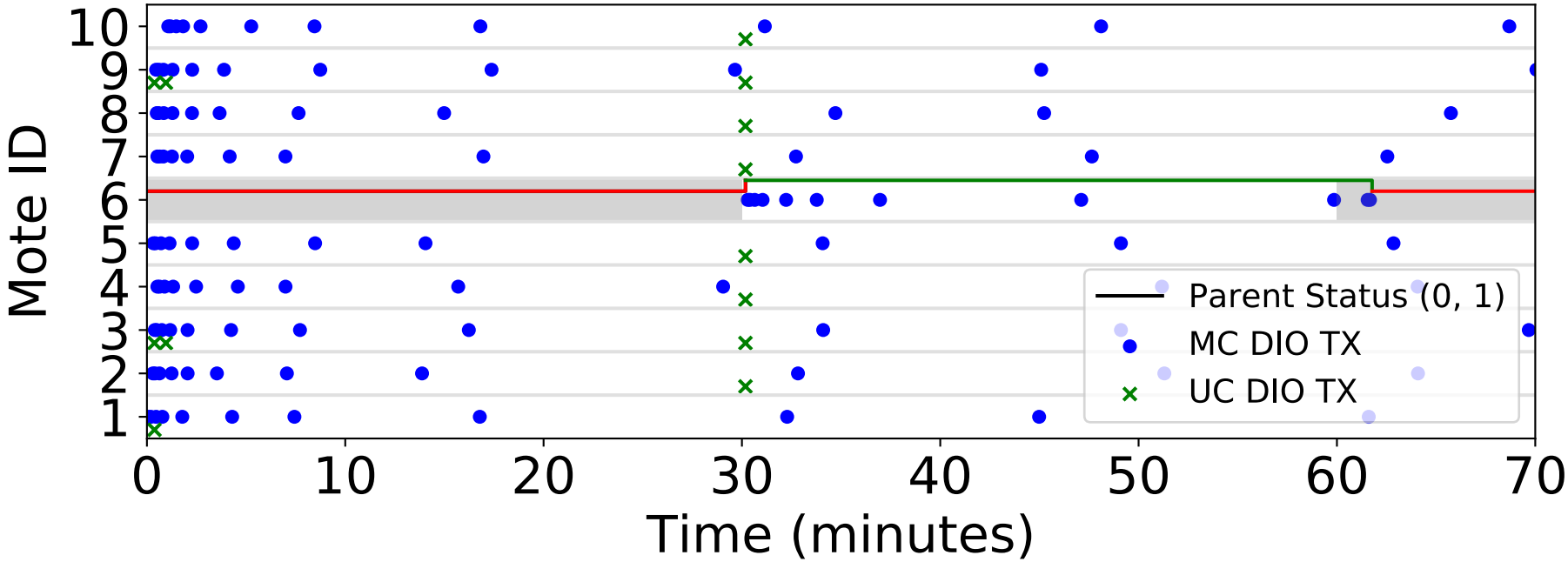
Mote ID
10
9
8
7
6
5
4
3
2
1
0
10
20
30
40
50
60
70
Time (minutes)
Parent Status (0, 1)
MC DIO TX
UC DIO TX

N + T flags + MC

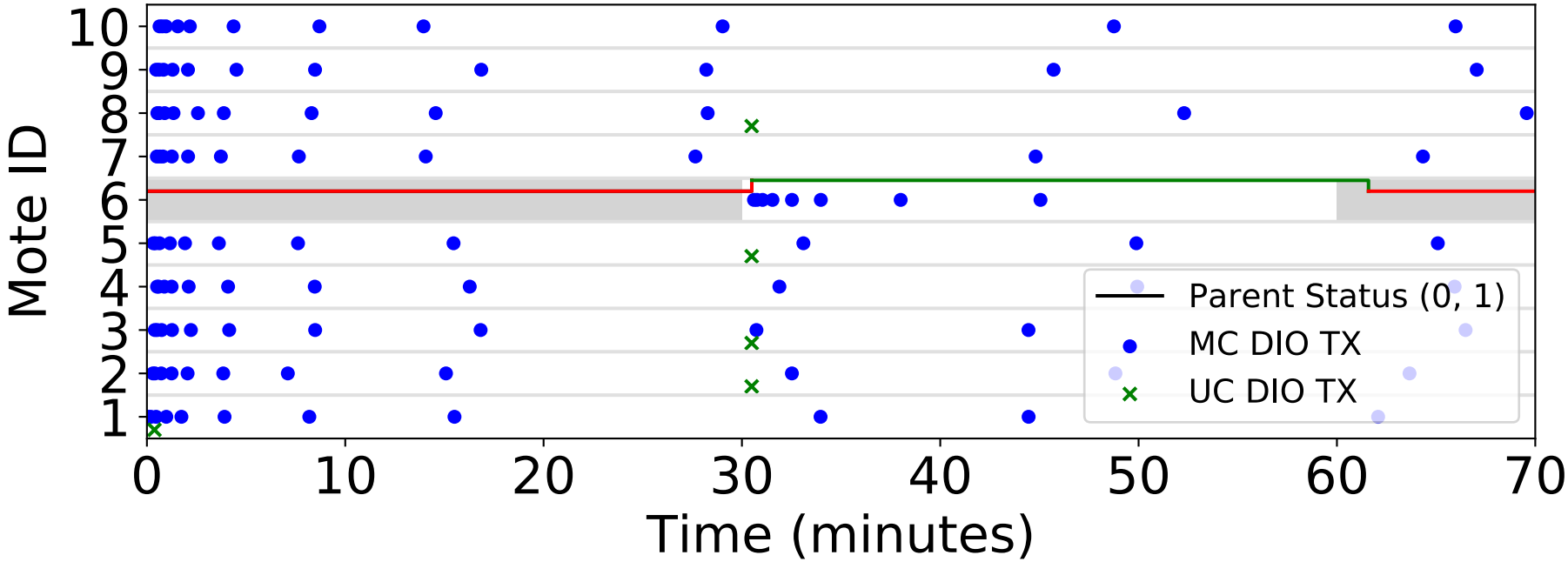
Mote ID
10
9
8
7
6
5
4
3
2
1
0
10
20
30
40
50
60
70
Time (minutes)
Parent Status (0, 1)
MC DIO TX
UC DIO TX

N + T flags + MC + RS

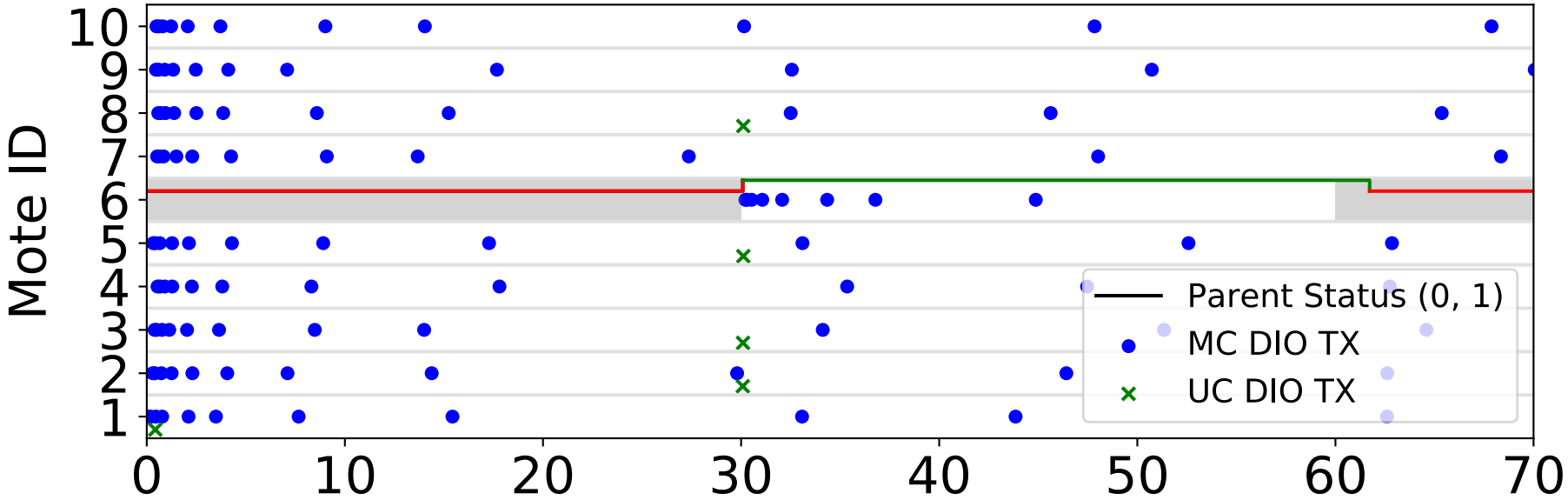

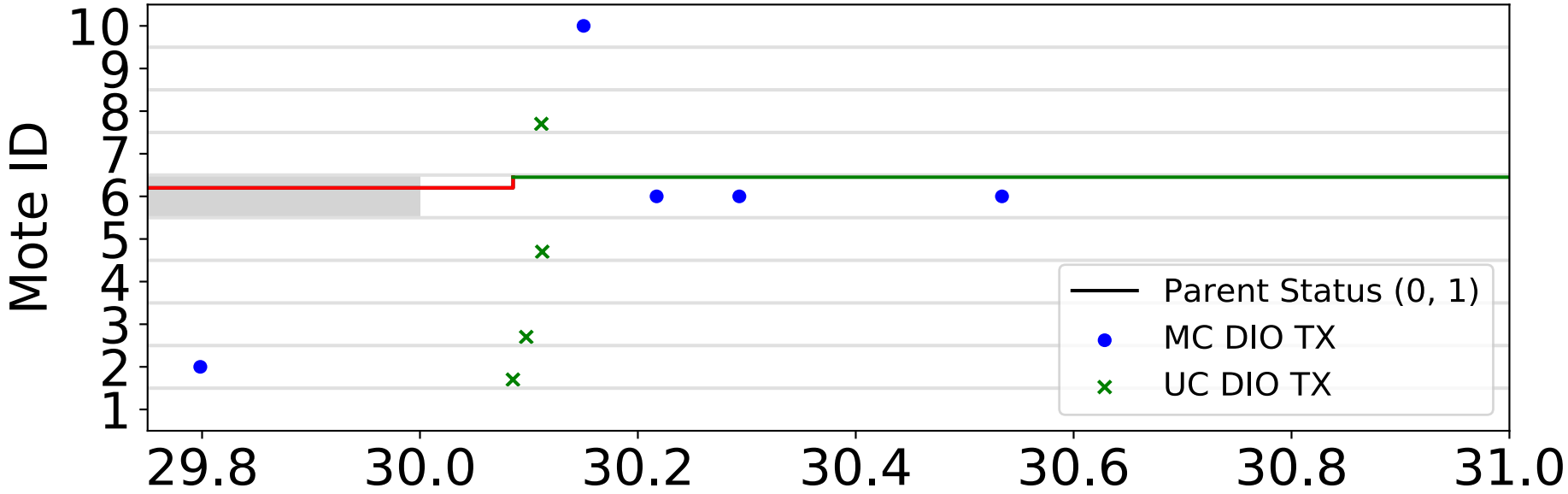

Road Forward

- More Use Cases to be included in the draft?

- Opinions for the future of this use-cases draft?
  - to be included in the appendix of a solution draft?

- Regarding the solution draft, (single or multiple?) :
  - draft-thubert-roll-eliding-dio-information-04
  - draft-ietf-roll-dis-modifications-01

Thanks!

word-smithing welcome

Enabling secure network enrollment in RPL networks

draft-ietf-roll-enrollment-priority-03

Michael Richardson
mcr+ietf@sandelman.ca

IETF107, April 2020

Status of Document

- split off from 6tisch-enhanced-beacon in 2016
- was richardson-6tisch-roll-join-priority in Feb 2018, but renamed enrollment-priority to avoid confusion.
- version -02 just posted, edited to remove all references to “join”, but kept “Join Proxy” term to match draft-ietf-6tisch-minimal-security

version -02

- all uses of “join” -> enroll or enrollment
- added section on what to do if option is not present

Example enrollment priority

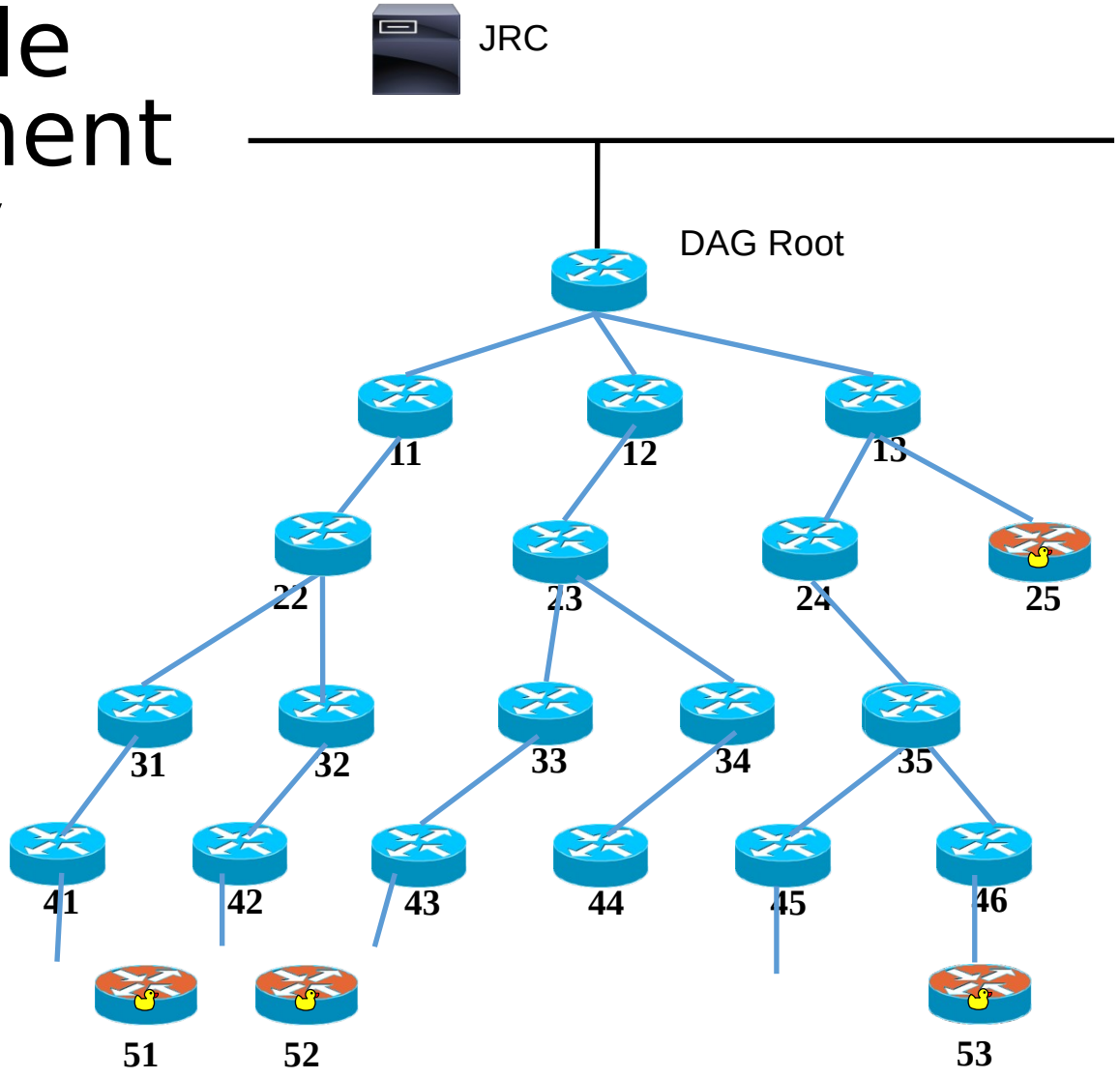

Enhanced Beacons

DIOs

base diagram from PThubert

Example enrollment priority

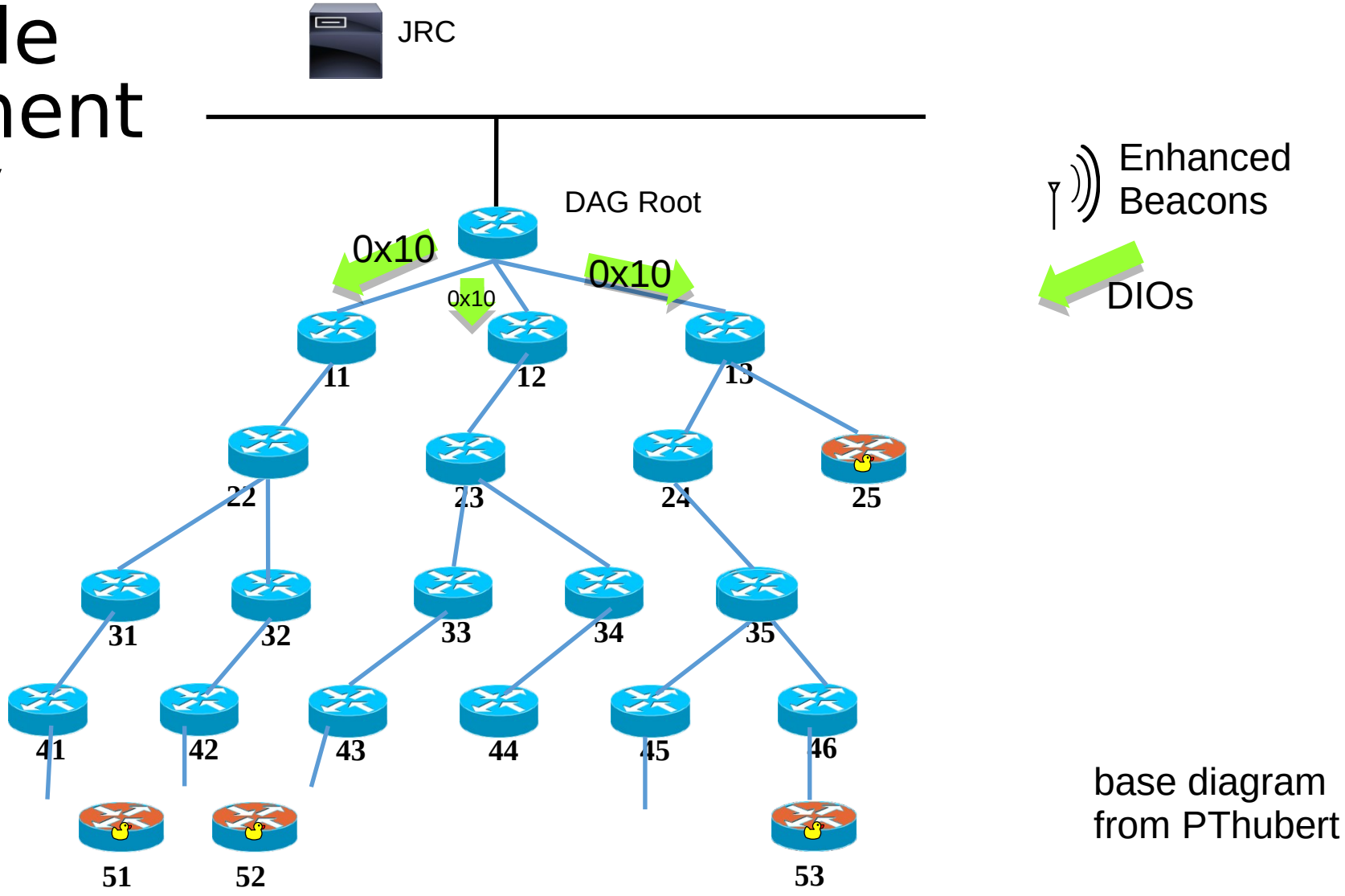

base diagram from PThubert

Example enrollment priority

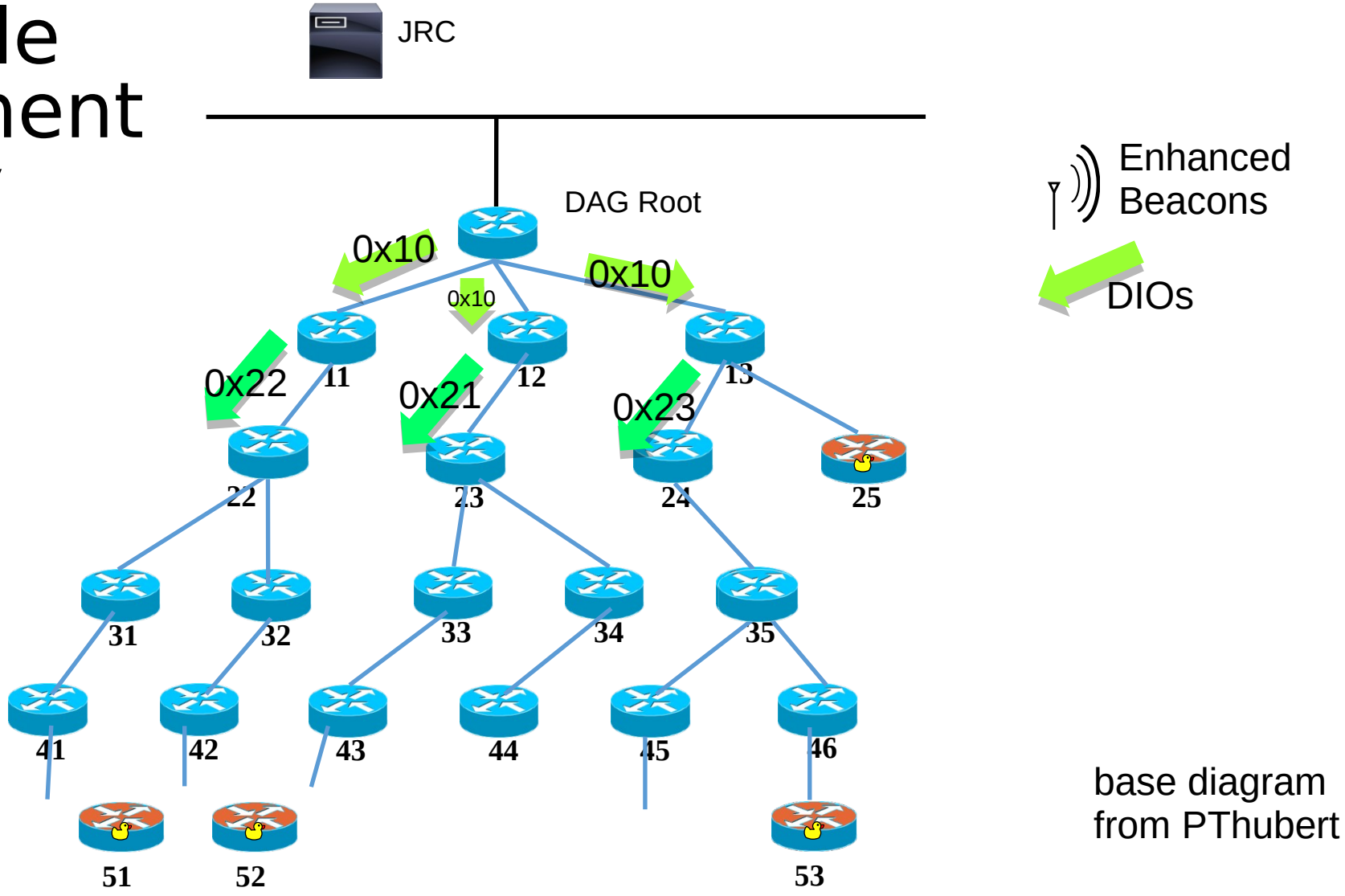

base diagram from PThubert

Example enrollment priority

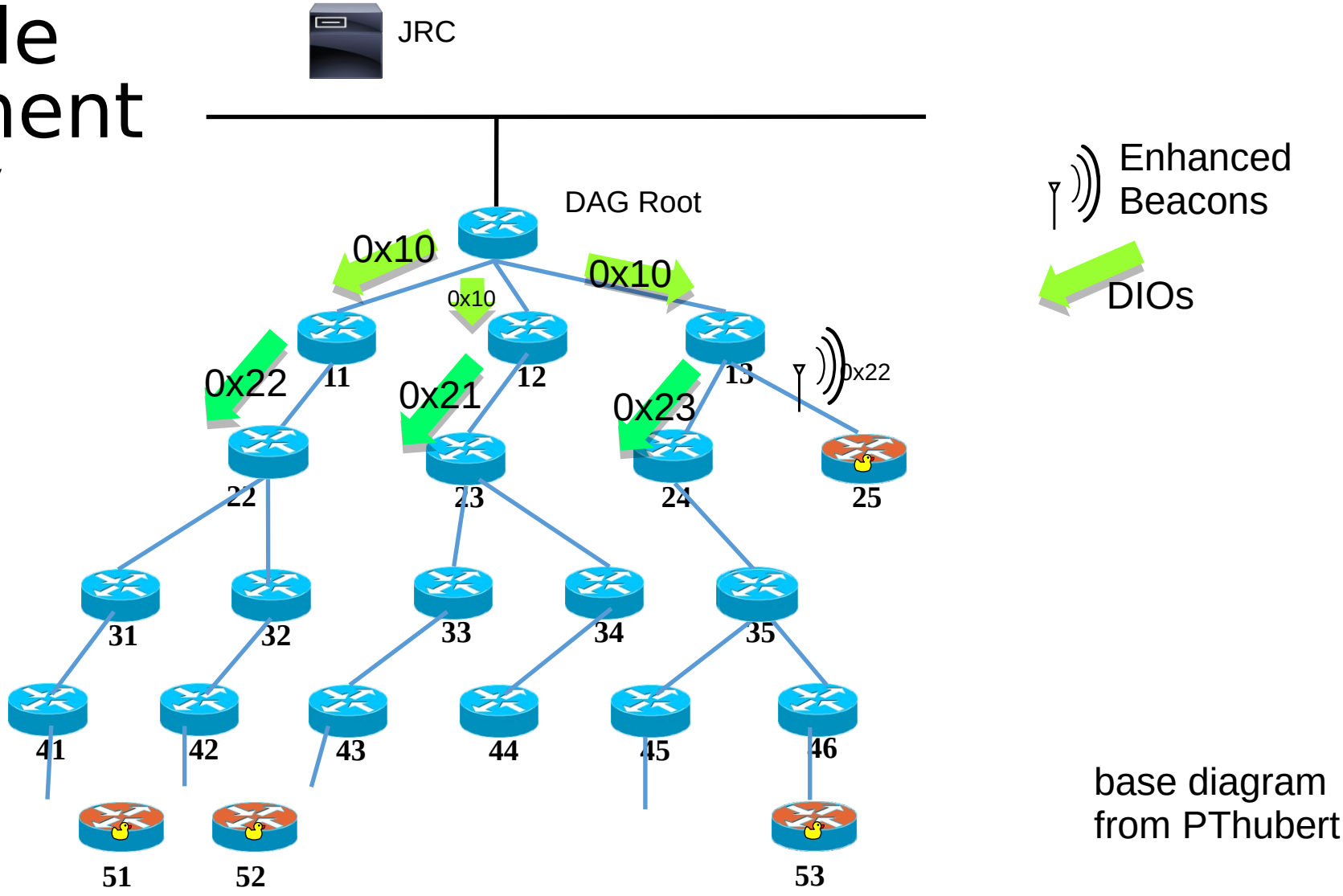

base diagram from PThubert

Example enrollment priority

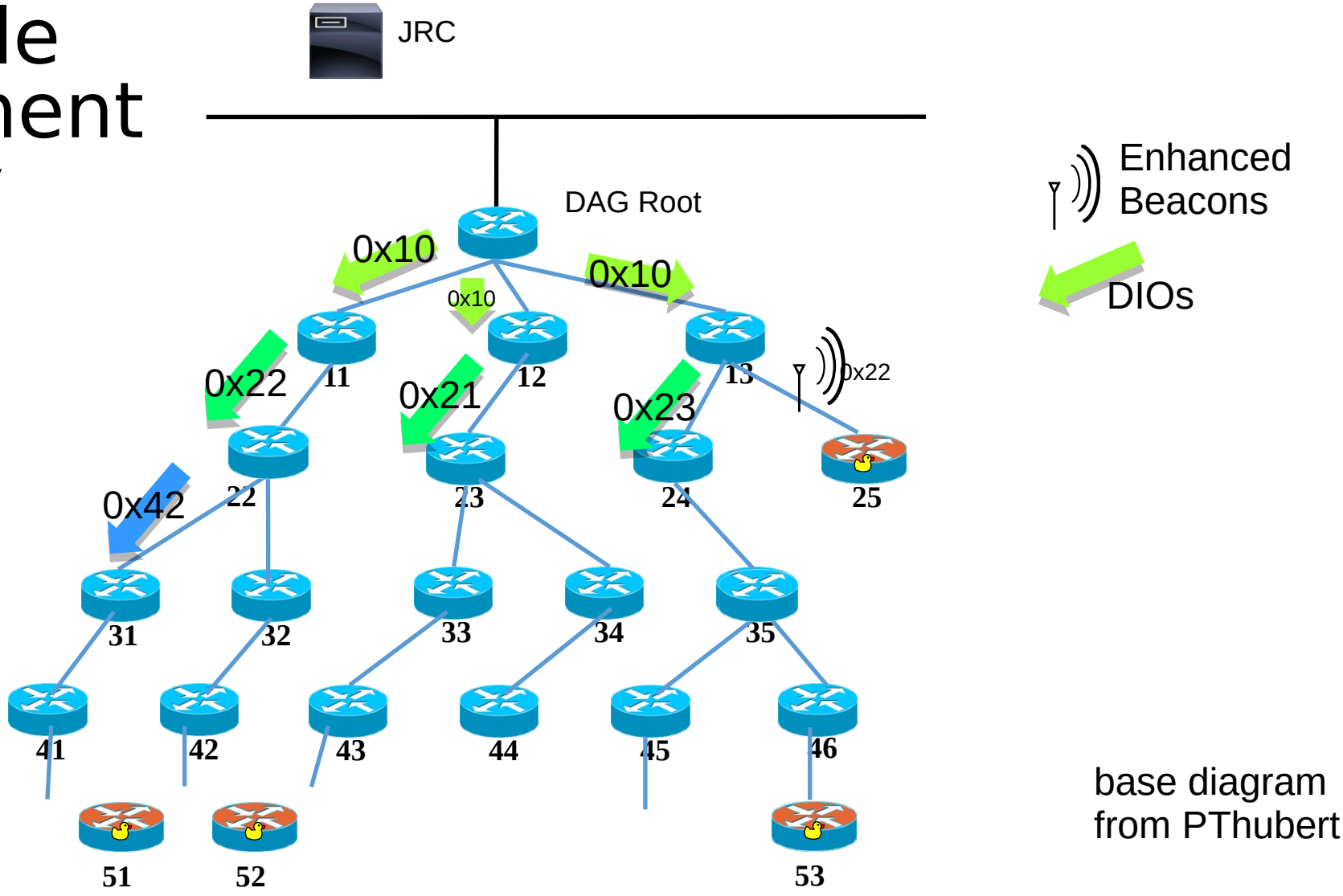

base diagram from PThubert

Example enrollment priority

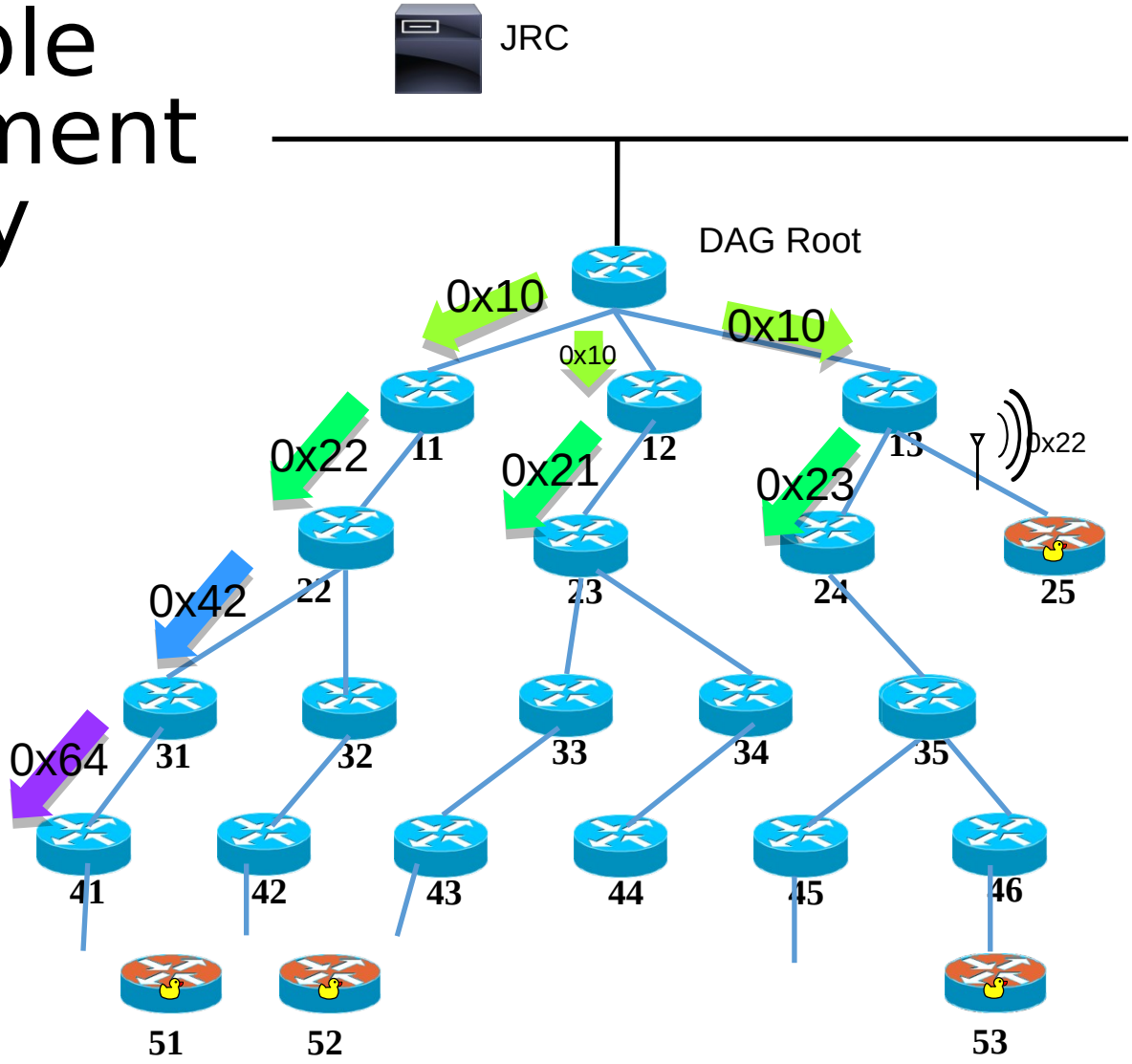

Enhanced Beacons

DIOs

base diagram from PThubert

Example enrollment priority

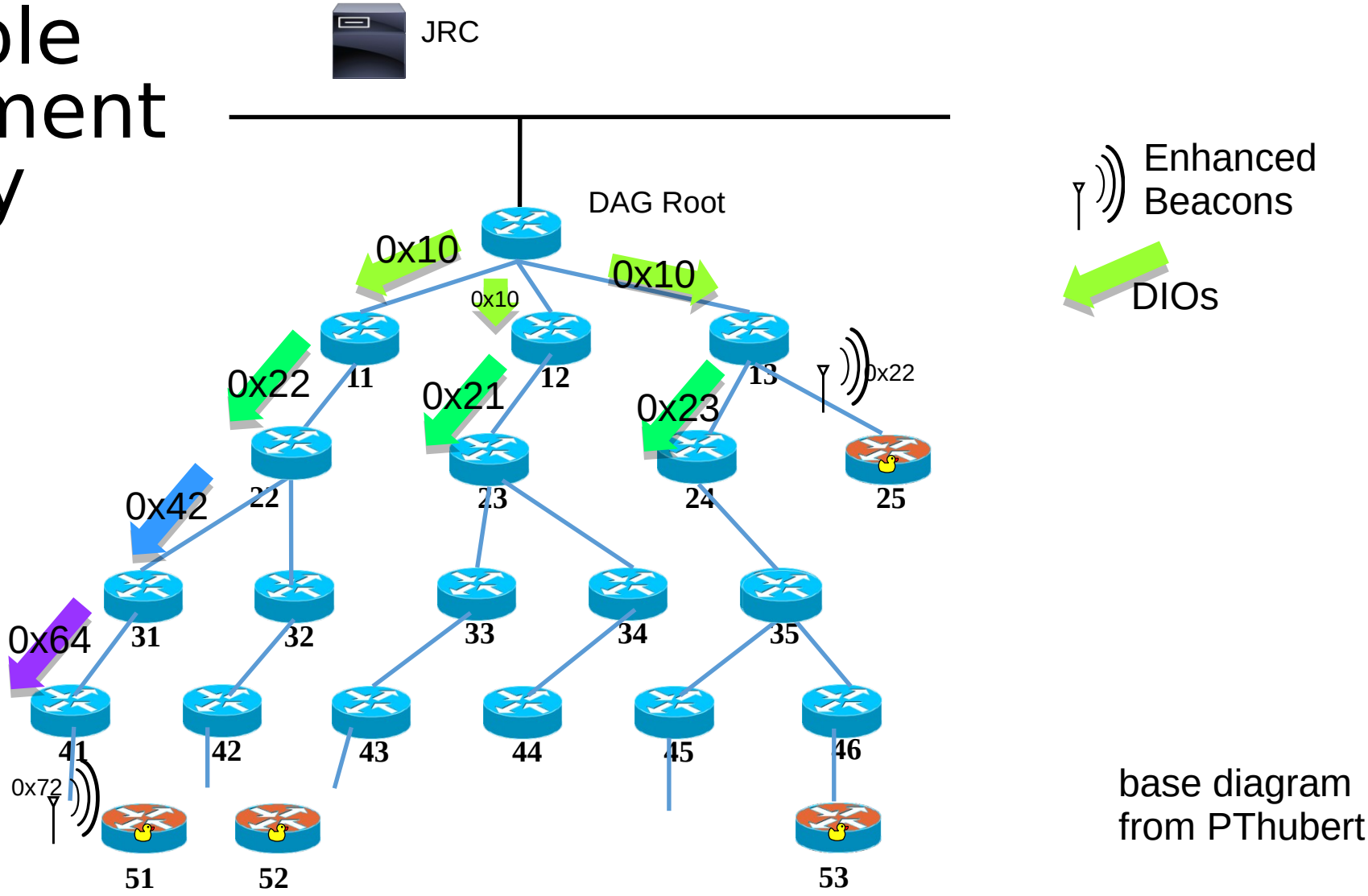

base diagram from PThubert

Example enrollment priority

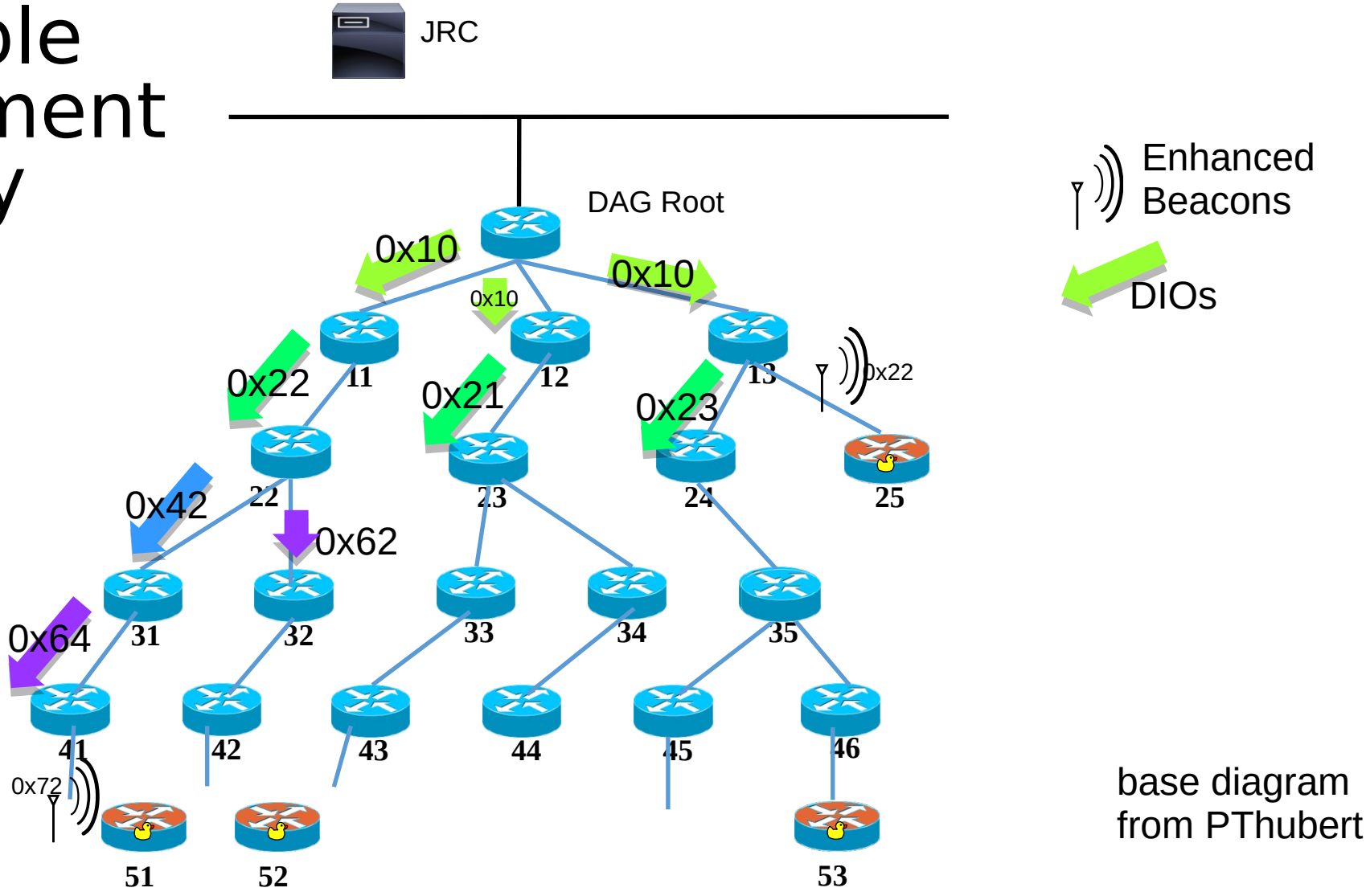

base diagram from PThubert

Example enrollment priority

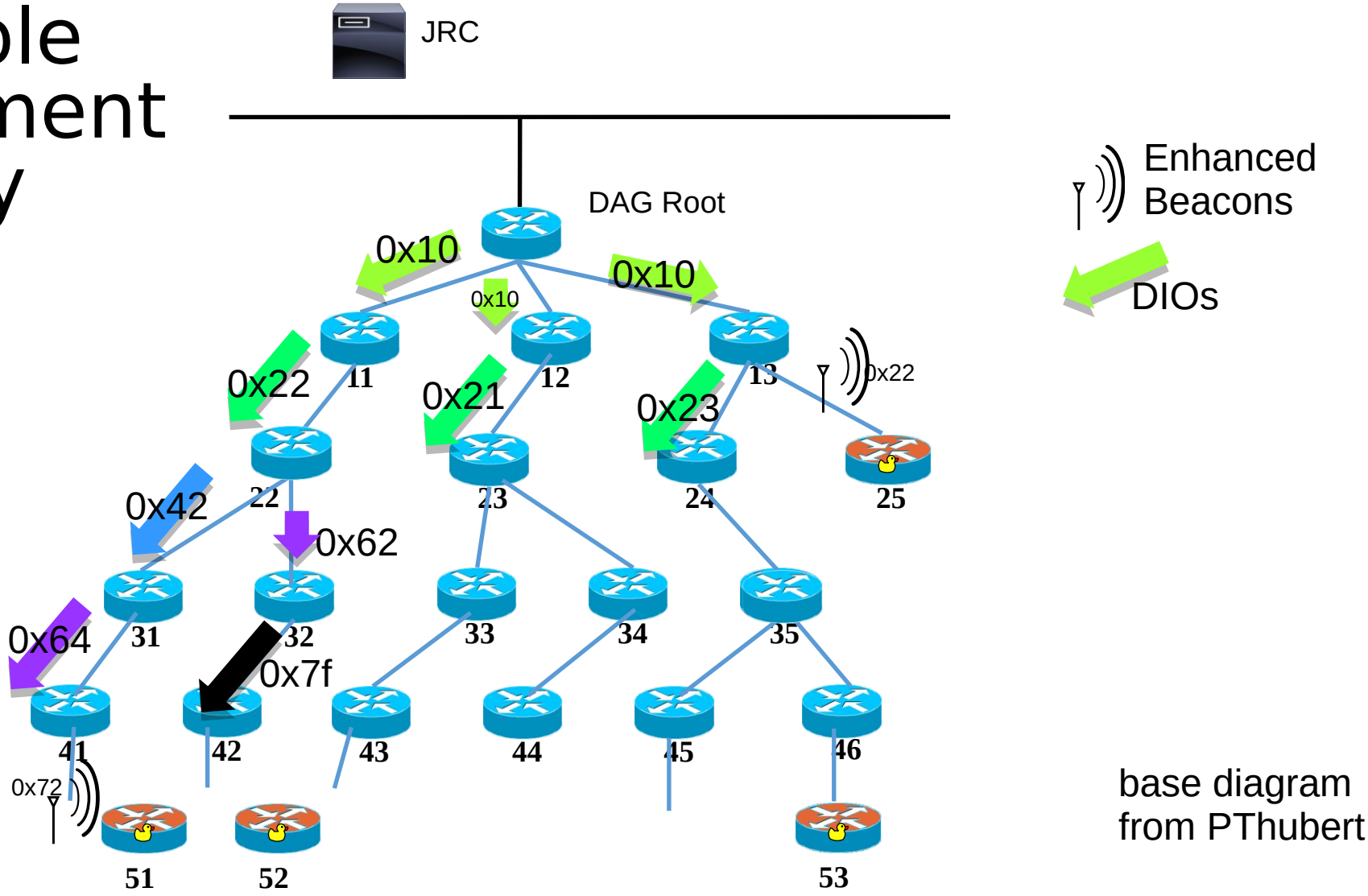

base diagram from PThubert

Example enrollment priority

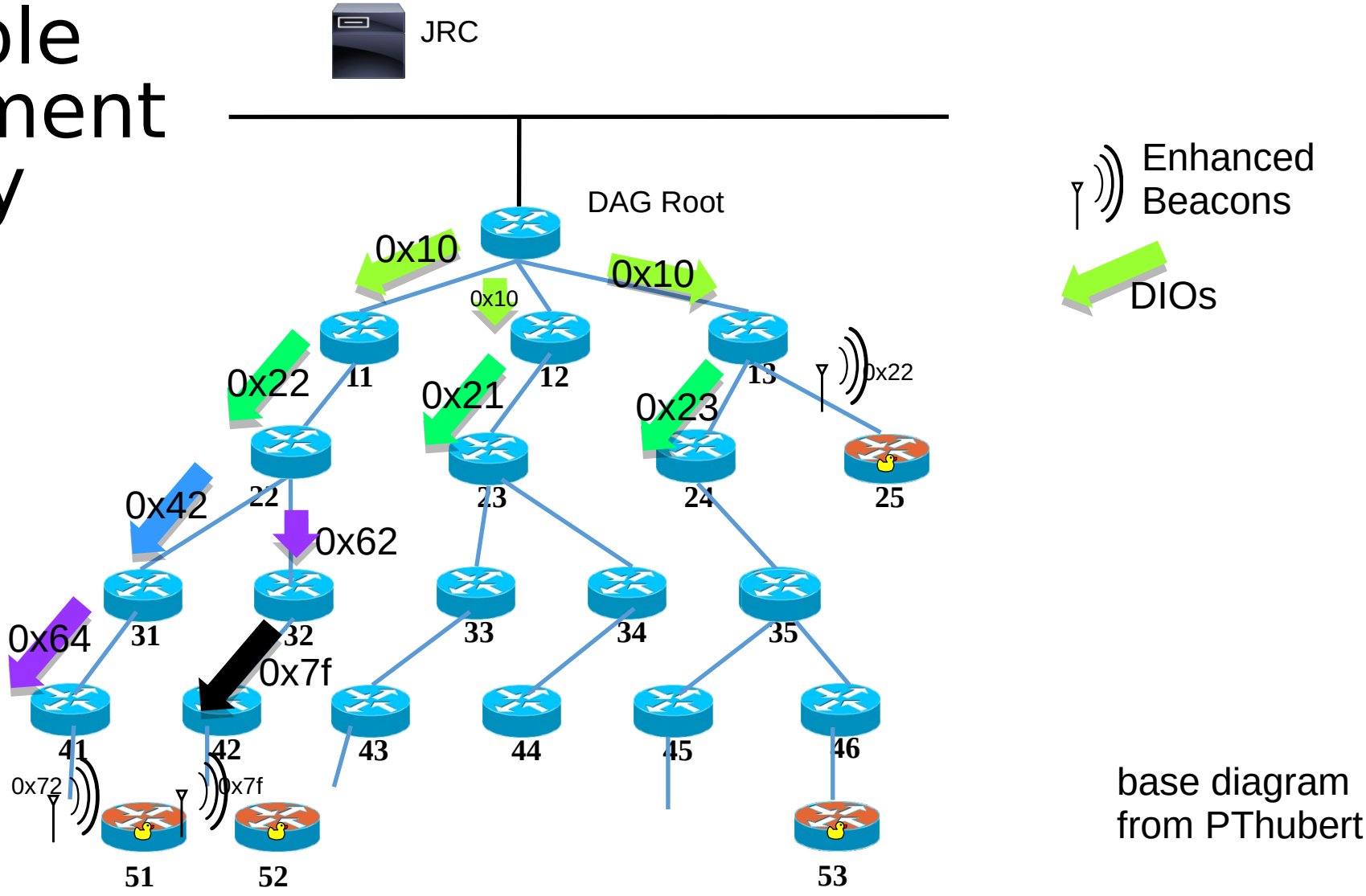

Example enrollment priority

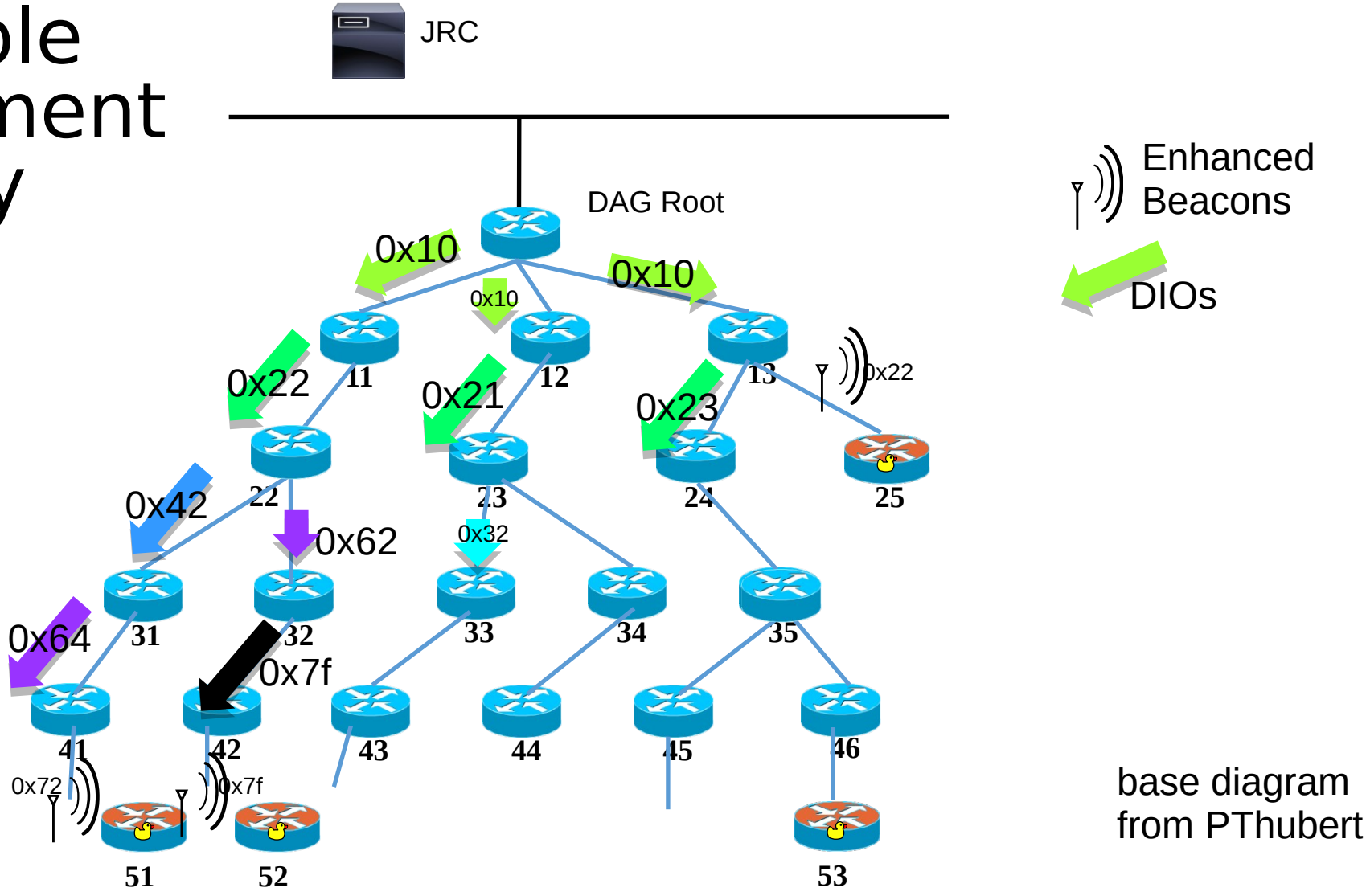

base diagram from PThubert

Example enrollment priority

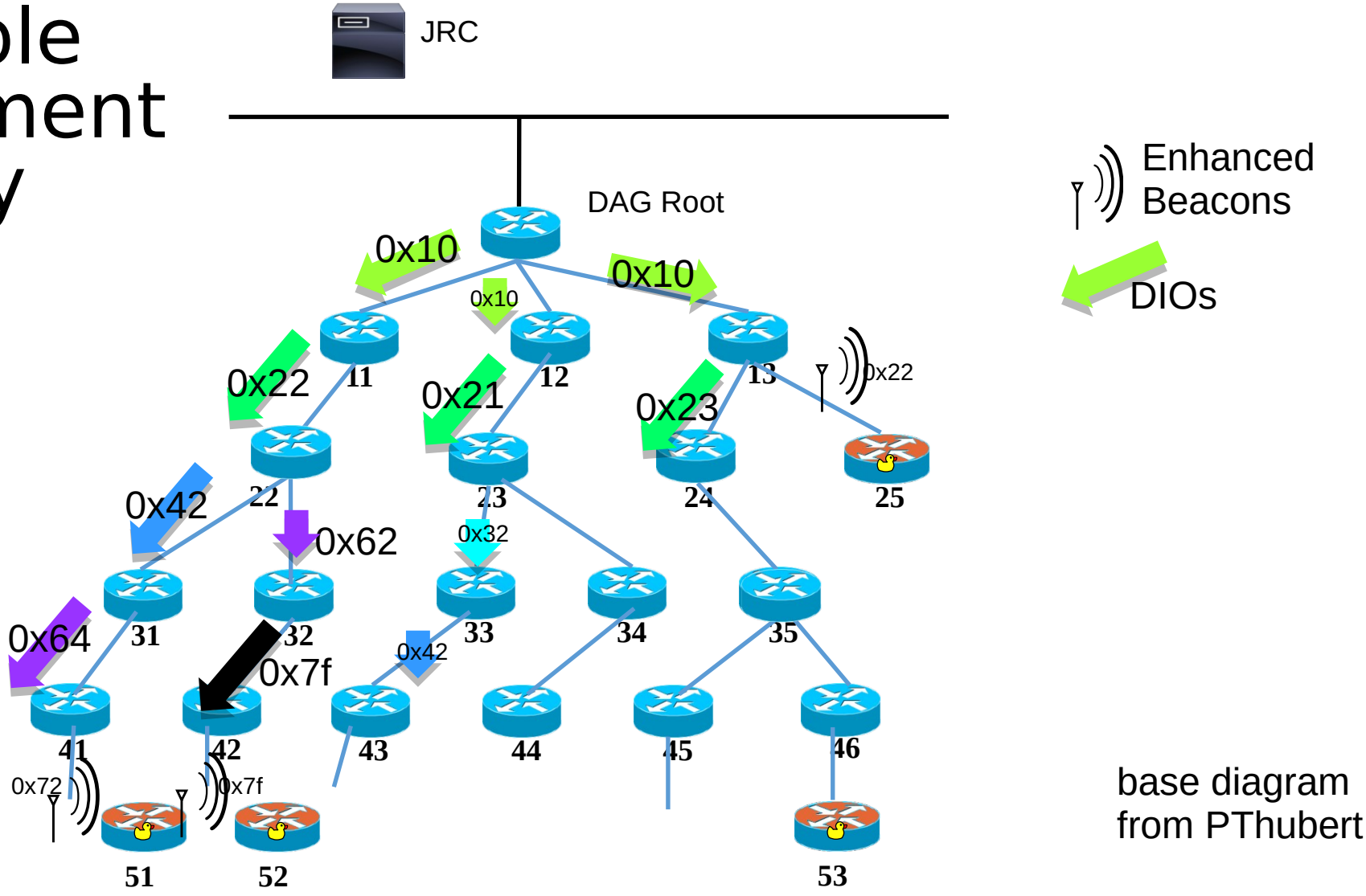

base diagram from PThubert

Example enrollment priority

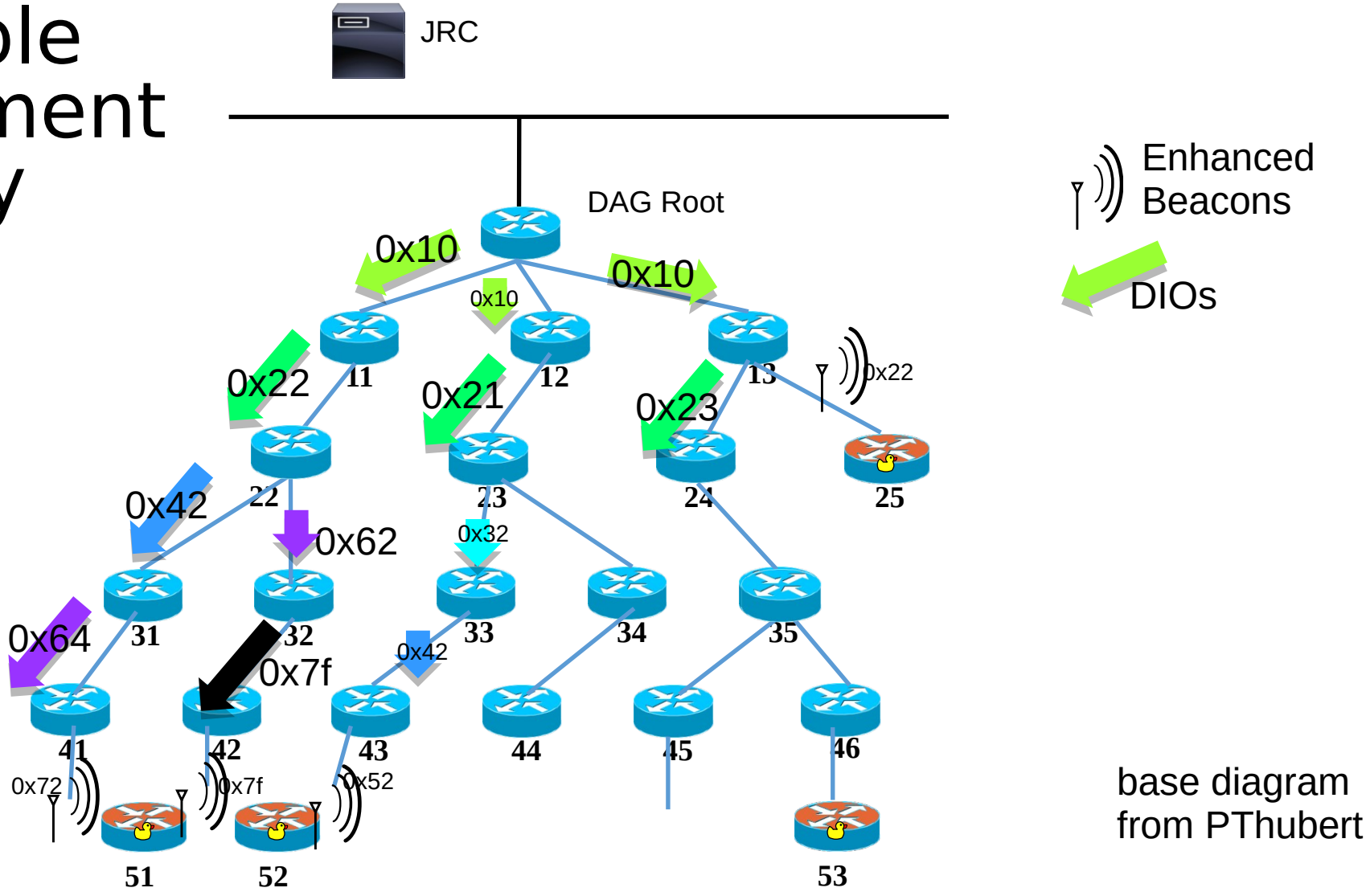

With impaired node (24)

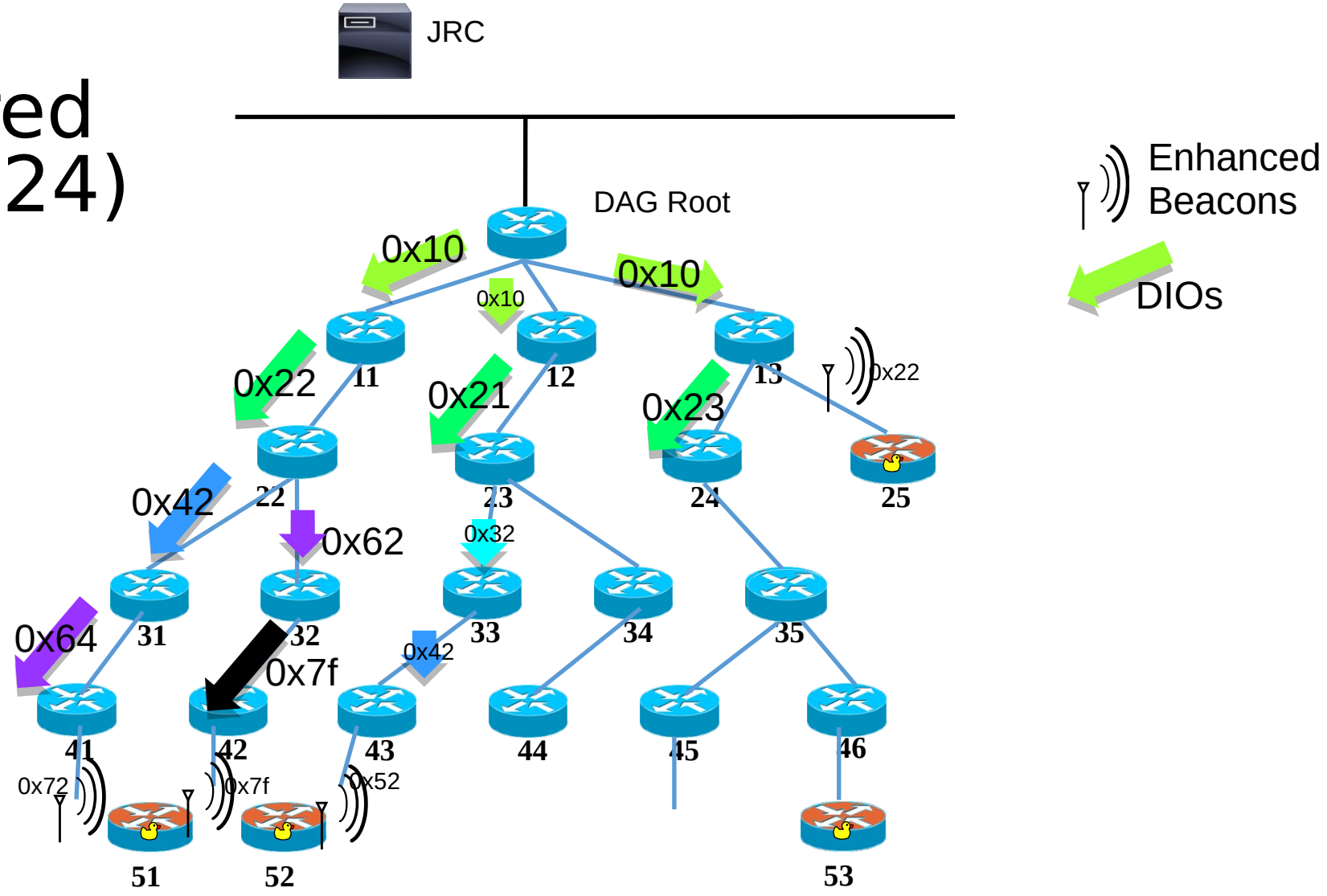

With impaired node (24)

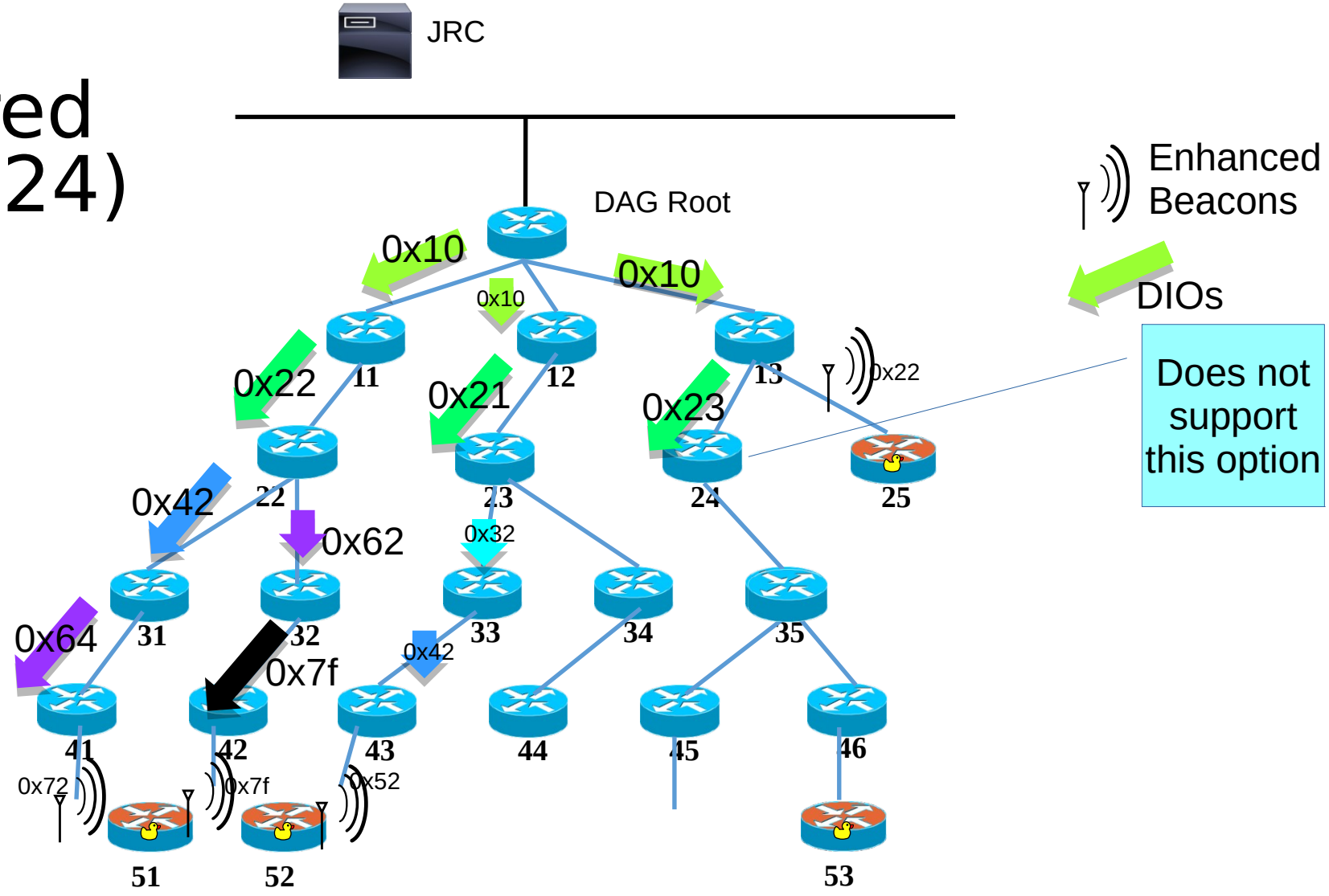

With impaired node (24)

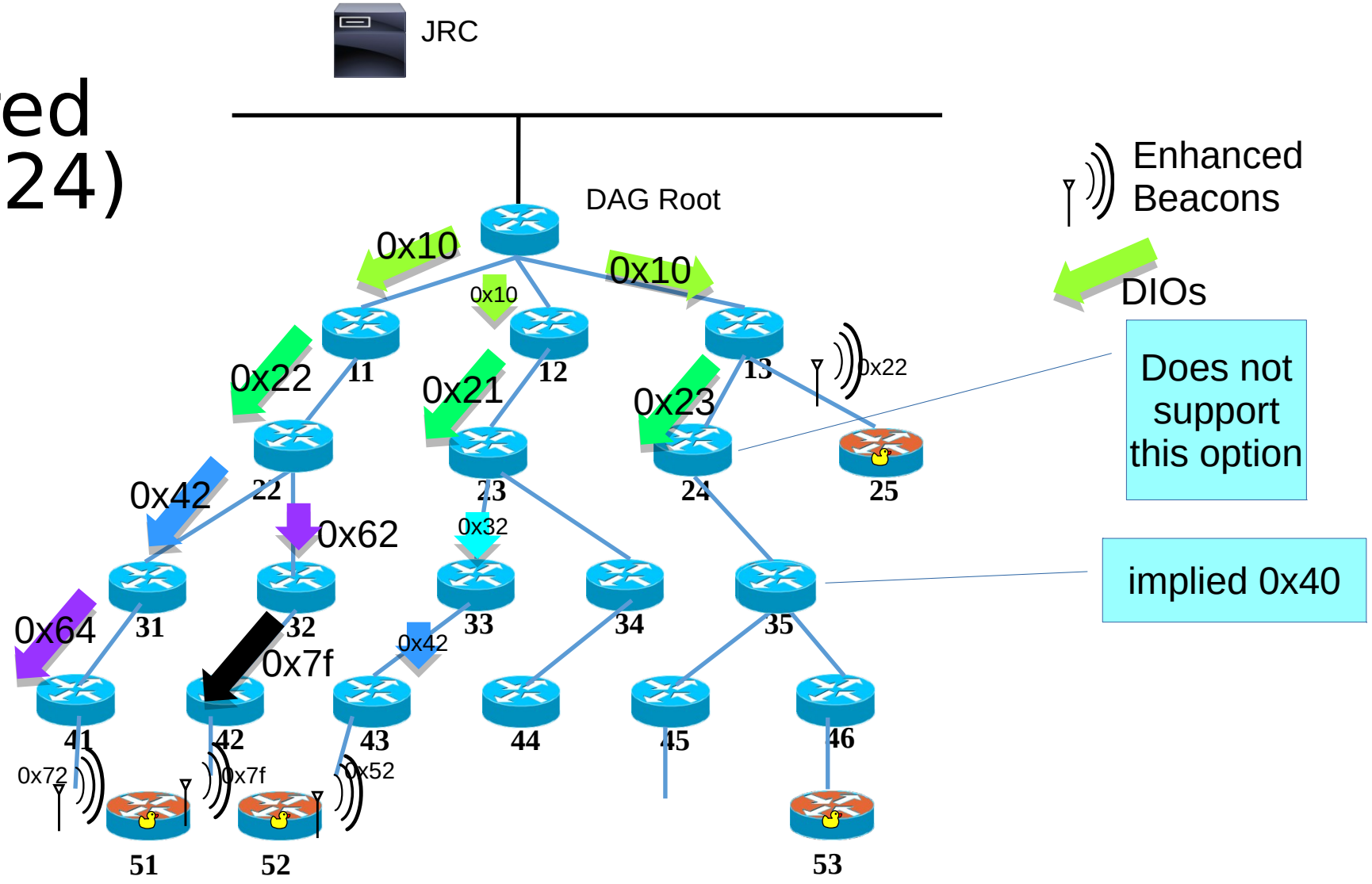

With impaired node (24)

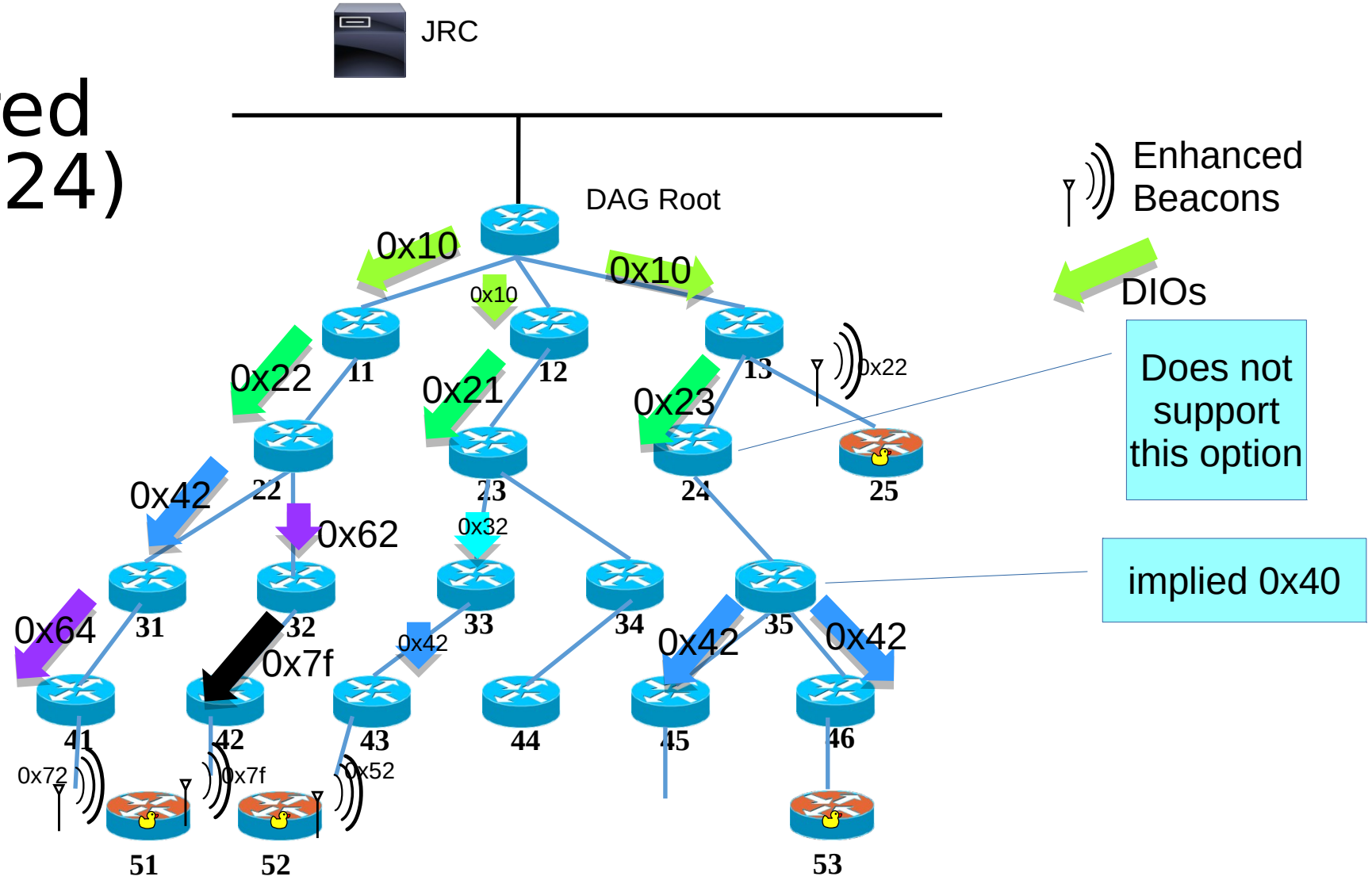

With impaired node (24)

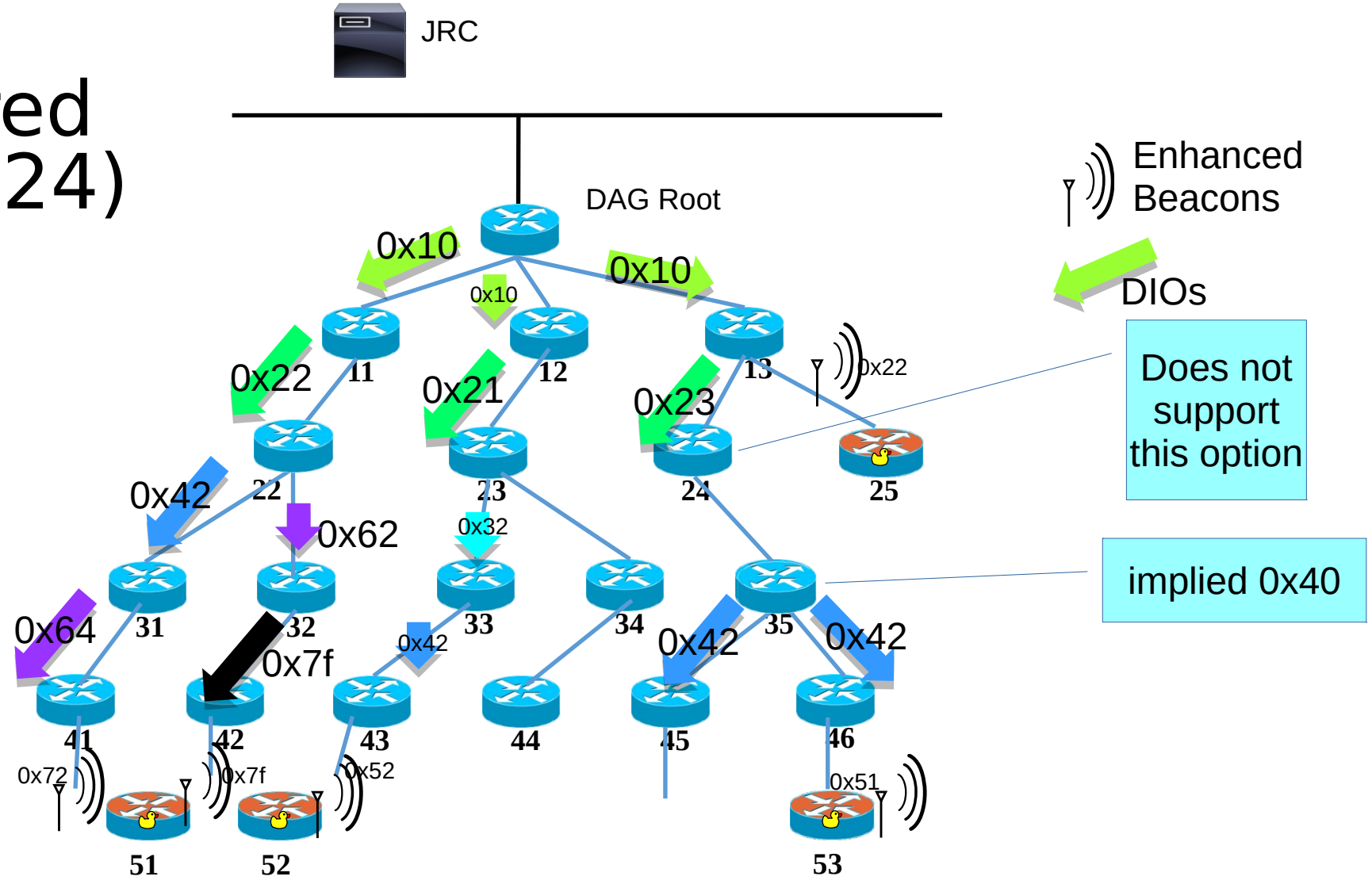

With impaired node (24)

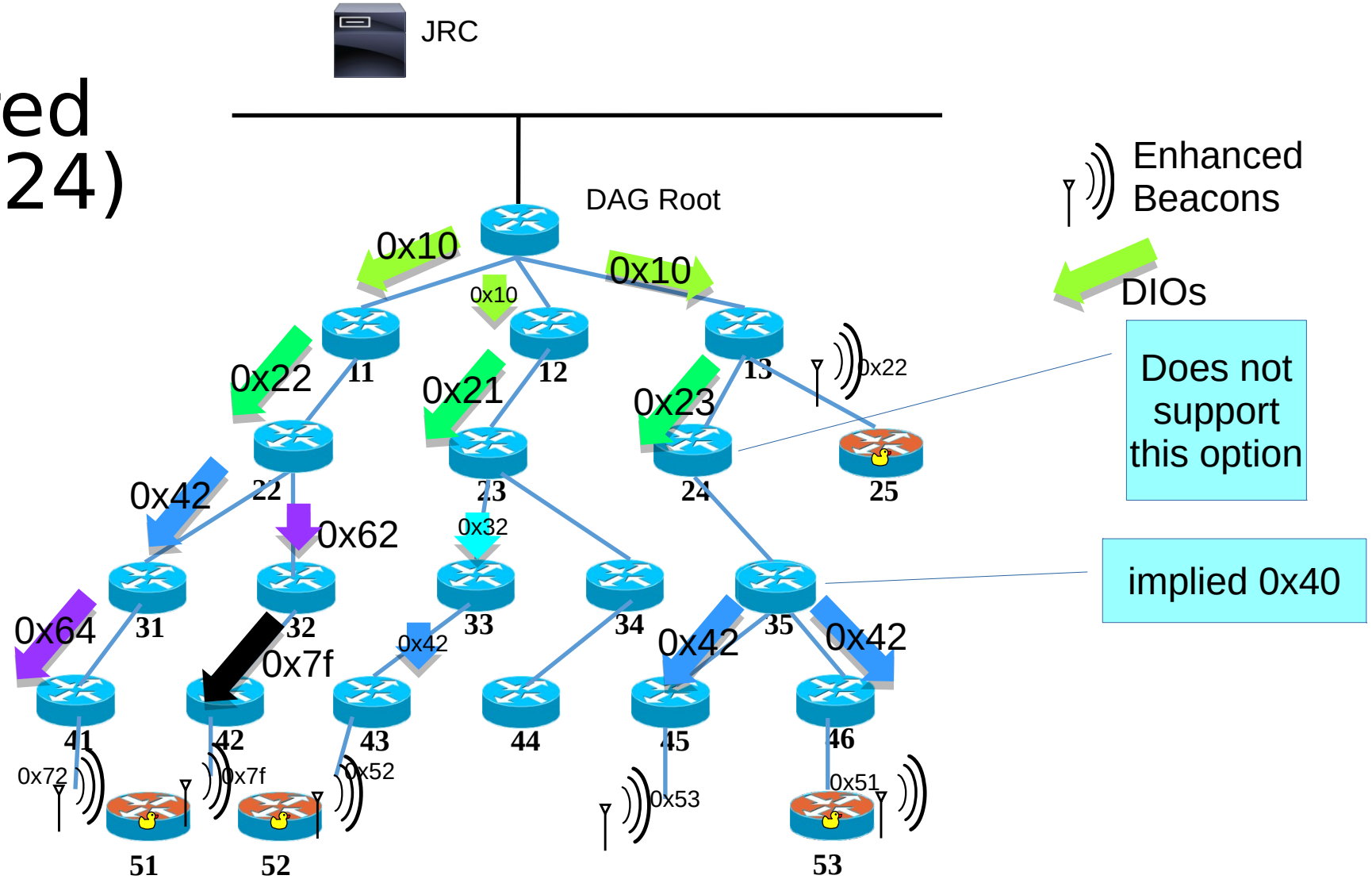

Questions?

draft-ietf-roll-enrollment-priority-03

Michael Richardson
mcr+ietf@sandelman.ca

Eliding and Querying RPL Information

draft-thubert-roll-eliding-dio-information

P. Thubert, D. Barthel, R.A. Jadhav

Pascal Thubert

IETF 107

ROLL Virtual Meeting

Changes Highlights

- No Change Since IETF 106
- Needs WG attention to progress
- So far we were really busy
  - What with NP-DAO, RUL, turnon-RFC8138, UseOfRPLInfo drafts!
- Now a good time to reboot this?
- Next To Do's
  - Adapt to new MOPEXT/ CAPABILITIES split

What is this draft?

- The draft presents a method to safely elide a group of RPL options in a DIO message by synchronizing the state associated with each of these options between parent and child
- This is achieved using a new sequence counter in DIO messages called RPL Configuration State Sequence (RCSS)
- A child that missed a DIO message with an update of any of those protected options detects it by the change of RCSS and queries the update with a DIS Message.
- The draft also provides a method to fully elide the options in a DAO message.

Proposed method

- New RPL Configuration State Sequence (RCSS)
- Updates base objects
  - DIO to add RCSS
  - DAO to indicate it is abbreviated
  - DIS base objects to query missing options
- New “Abbreviated Option” Option (AOO)
  - Replacement for a full option, indicates last RCSS

Protected Options

The protected options are:

1. The Route Information Option (RIO) defined in section 6.7.5 of [RPL]
2. The DODAG Configuration Option (DCO) defined in section 6.7.6 of [RPL]
3. The Prefix Information Option (PIO) defined in section 6.7.10 of [RPL]
4. The Extended MOP Option (MOPex) defined in [MOPEX-CAP]
5. The Global Capabilities Option (GCO) defined in [MOPEX-CAP]

New Abbreviated Option Option

- Used as replacement of the full option
- Indicates the RCSS of the last change for this option

```
 0                   1                   2                   3
 0 1 2 3 4 5 6 7 8 9 0 1 2 3 4 5 6 7 8 9 0 1 2 3 4 5 6 7 8 9 0 1
+-+-+-+-+-+-+-+-+-+-+-+-+-+-+-+-+-+-+-+-+-+-+-+-+-+-+-+-+-+-+-+-+
|  Option Type  | Option Length | Abbrev. opt.  | Last Mod RCSS |
+-+-+-+-+-+-+-+-+-+-+-+-+-+-+-+-+-+-+-+-+-+-+-+-+-+-+-+-+-+-+-+-+
```

Figure 3: Abbreviated Option Option Format

Updated DIS object

- New bits to indicated requested options
- Last RCSS to which this node is synchronized

```
 0                   1                   2
 0 1 2 3 4 5 6 7 8 9 0 1 2 3 4 5 6 7 8 9 0 1 2 3
+-+-+-+-+-+-+-+-+-+-+-+-+-+-+-+-+-+-+-+-+-+-+-+-+
|R|D|P[M|O| Flg | LastSync RCSS |   Option(s)...
+-+-+-+-+-+-+-+-+-+-+-+-+-+-+-+-+-+-+-+-+-+-+-+-+
```

Figure 2: Updated DIS Base Object

RCSS operation

- The RCSS applies to a DIO Message and a same value of the RCSS can be used in DIO messages that are sent consecutively with no change in the protected options.
- The RCSS is incremented by the Root using a lollipop technique
- A reboot of the Root is detected when the RCSS moves from the circular to the straight part of the lollipop.
- During the straight part of the lollipop, a second reboot of the Root might not be recognized. For that reason the protected options MUST be provided in full with each increment on the RCSS during the straight part of the lollipop.
- When a field is modified in one of the protected options, the Root MUST send a DIO with an incremented RCSS and the modified protected option(s) in full.

Resync operation

A child can resynchronize any of the protected options to the latest RCSS by sending a DIS Message to a candidate parent that advertises that RCSS in DIO messages.

The child MUST set the desired combination of 'R', 'D', 'P', 'M' and 'O' flags to indicate the option(s) that it needs updated.

The child MUST signal in the Last Synchronized RCSS field of the DIS the freshest value of RCSS for which it was fully synchronized

The DIO message that is sent in response MUST contain in full all the options that are requested and that were updated since the Last Synchronized RCSS in the DIS Message. The other options MUST be added in the abbreviated form.

The options MAY be spread over more than one DIO message sent in a quick sequence.

Open Floor

Q&A