MON-B5G project ICT-20 (2019)

Distributed and zero-touch management of Network Slices in beyond 5G

Amina Boubendir
Orange Labs Networks, France
amina.boubendir@orange.com

IRTF Network Management Research Group (NMRG)
NMRG 61th meeting
17/05/2021

orange™

MonB5G

"Zero-touch distributed management and orchestration of Network Slices in the support of massive scales in beyond 5G."

Data-driven management with generalized use of ML & AI-based learning techniques.

Keywords: distributed management, zero-touch, management and orchestration, network slicing, massive scales, beyond 5G, Deep Reinforcement Learning, Federated Learning, MS, AE, DE.

Website: https://www.monb5g.eu/

Video presentation: https://www.youtube.com/watch?v=TzWEuUEyjUY

This Project has received funding from the European Union´s Horizon 2020 research and innovation programme under Grant Agreement No. 871780

Aalto University
ERICSSON
orange
NEC
Orchestrating a brighter world
b com
EURECOM
CTTC
i q
citrix
OTE
eBOS
12 partners, 8 countries
9 industry & 3 academia
5,5M€ for 36 months
(11/2019 – 11/2022)

MON-B5G structure

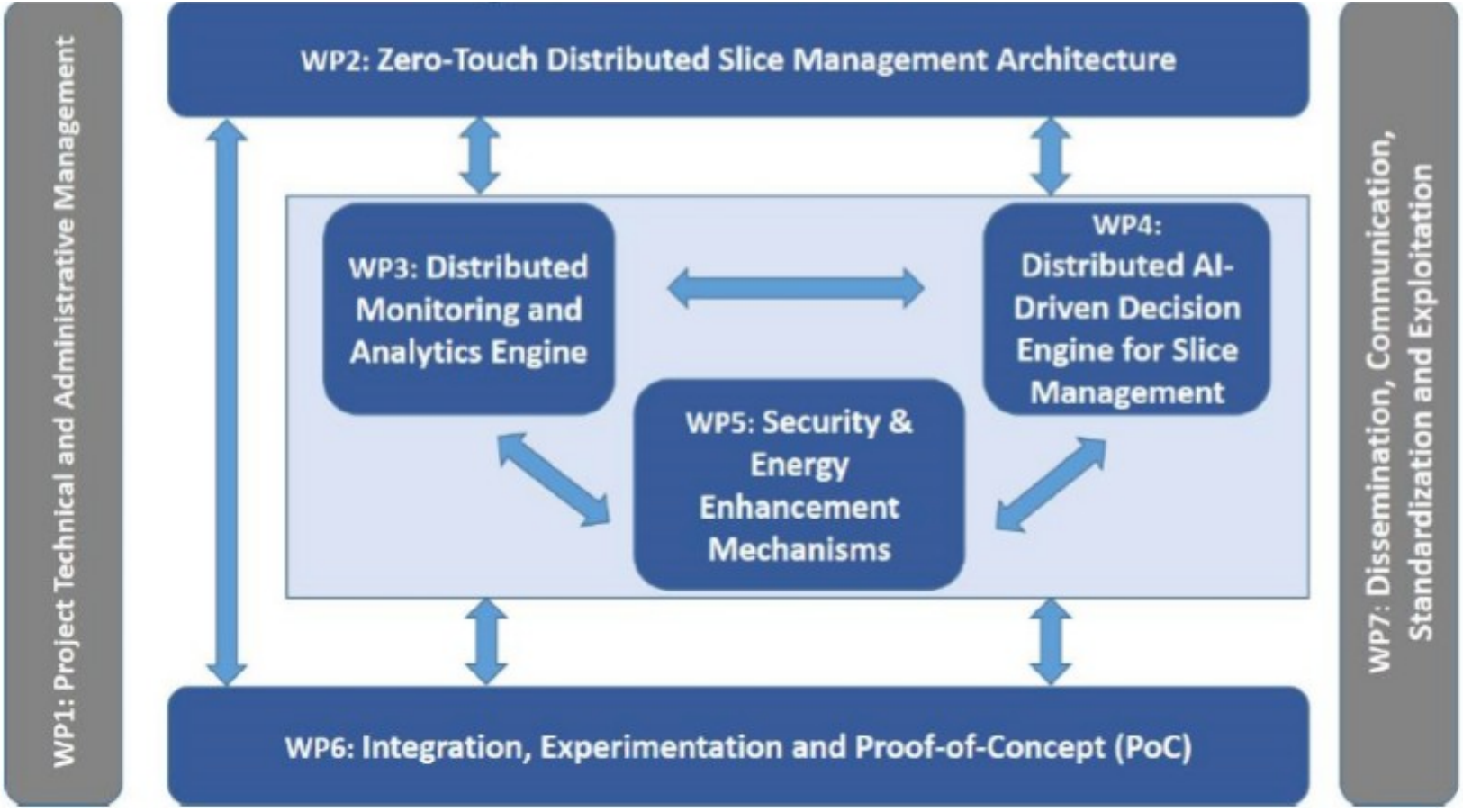

MON-B5G Technical development strategy and methodology

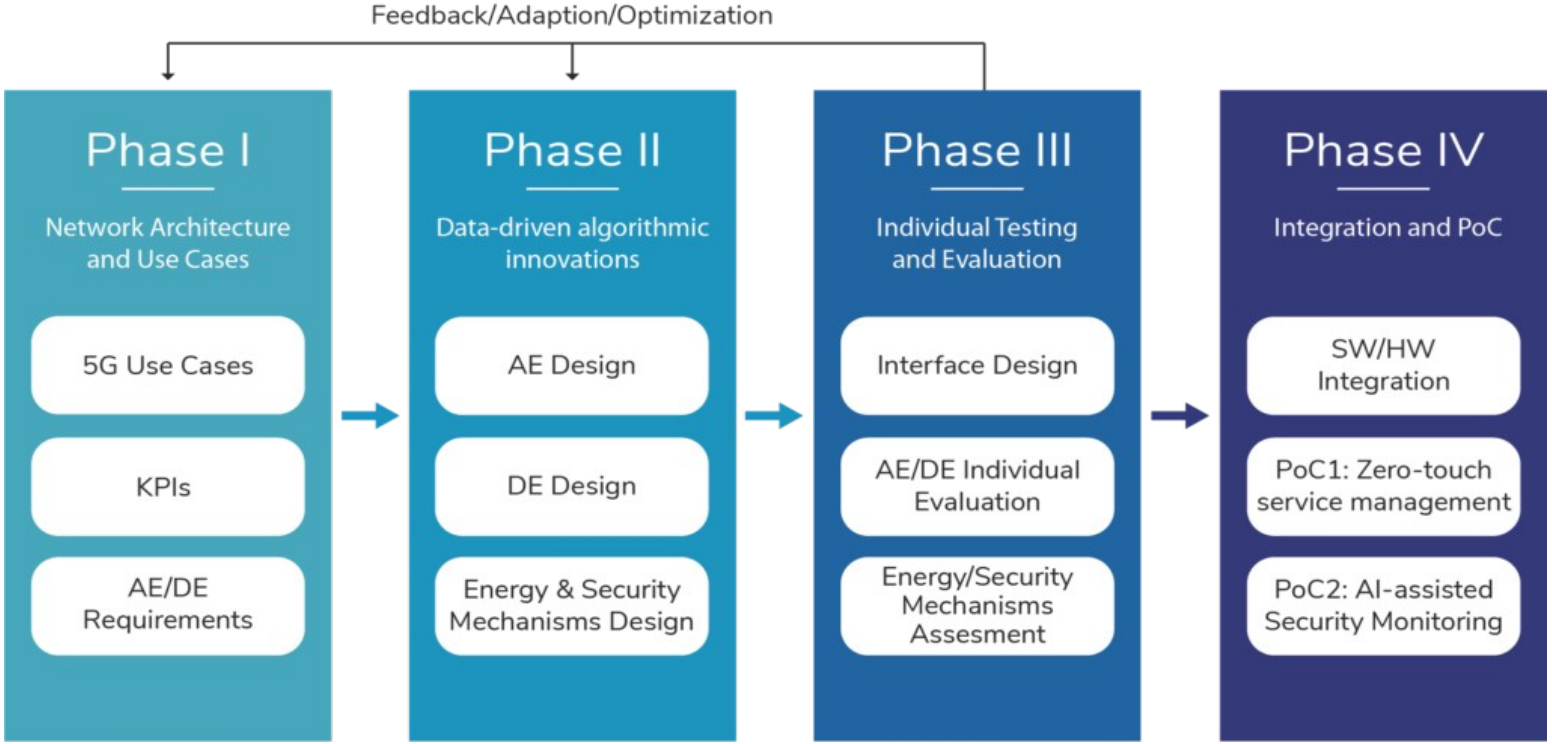

MONB5G main concept and vision
Distributed management for network slicing

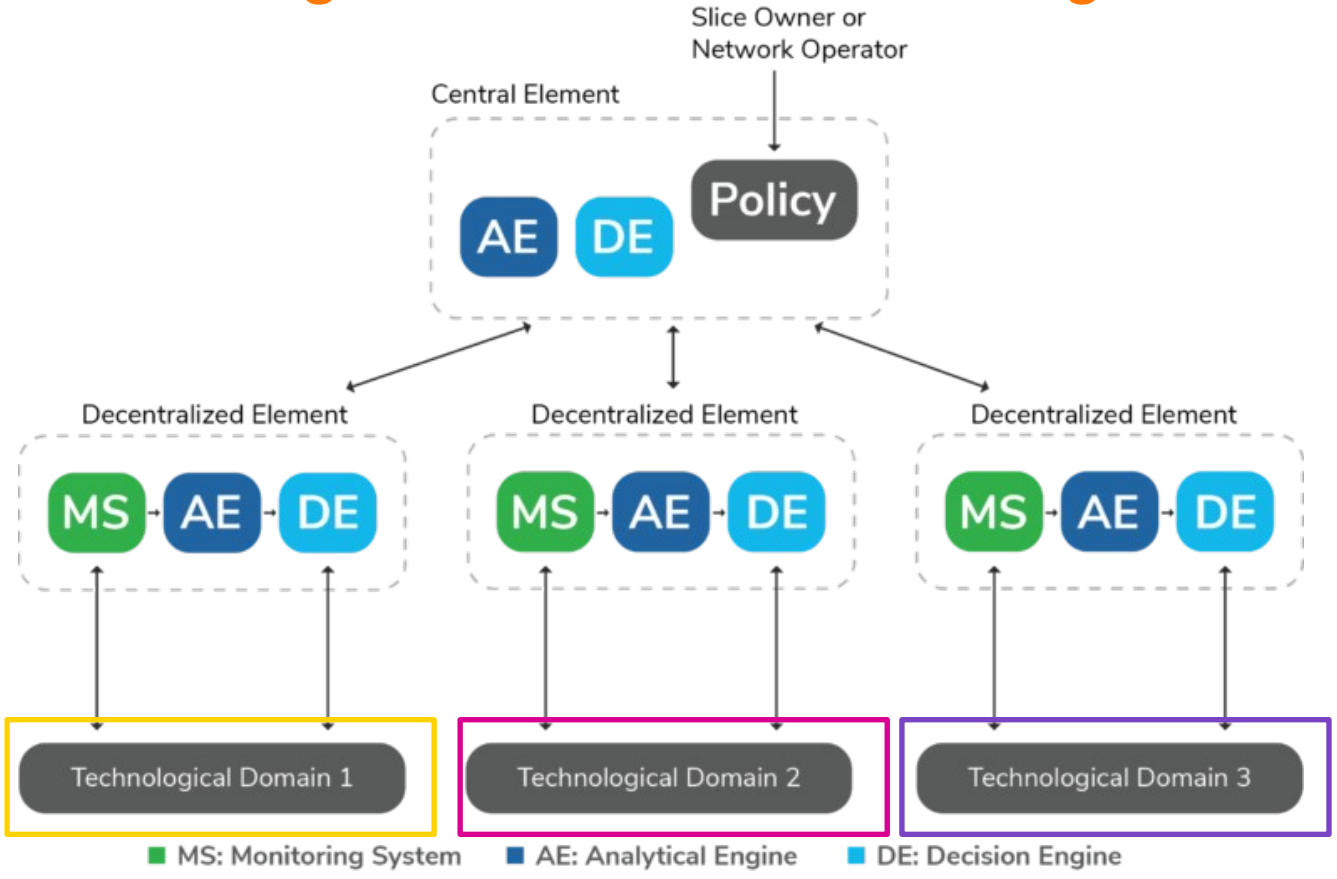

MONB5G Slice life-cycle stakeholders & business model

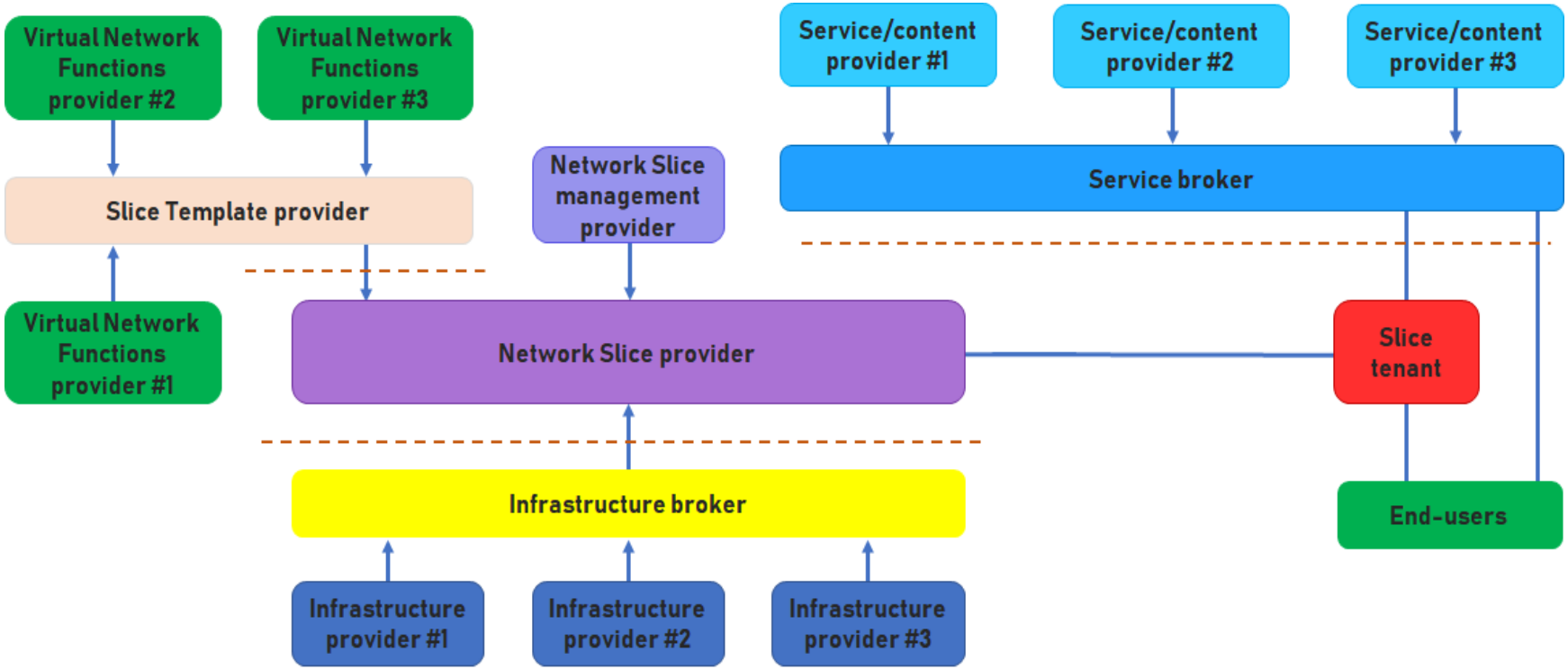

MONB5G's Relevance and impact on 5G-PPP KPIs

	Societal KPIs:	
S1	Enabling advanced User controlled privacy;	High
S2	Reduction of energy consumption per service up to 90% (as compared to 2010);	High
S3	European availability of a competitive industrial offer for 5G systems and technologies;	High.
S4	Stimulation of new economically viable services of high societal value like U-HDTV and M2M applications;	Medium
S5	Establishment and availability of 5G skills development curricula (in partnership with the EIT).	N.A.

	Business-related KPIs:	
B1	Leverage effect of EU research and innovation funding in terms of private investment in R&D for 5G systems in the order of 5 to 10 times;	Medium
B2	Target SME participation under this initiative commensurate with an allocation of 20% of the total public funding;	High
B3	Reach a global market share for 5G equipment & services delivered by European headquartered ICT companies at, or above, the reported 2011level of 43% global market share in communication infrastructure.	T.B.D.

	Performance KPIs	
P1	Providing 1000times higher wireless area capacity and more varied service capabilities compared to 2010.	N.A.
P2	Saving up to 90% of energy per service provided.	High
P3	Reducing the average service creation time cycle from 90 hours to 90 minutes.	High
P4	Creating a secure, reliable and dependable Internet with a "zero perceived" downtime for services provision.	High.
P5	Facilitating very dense deployments of wireless communication links to connect over 7 trillion wireless devices serving over 7 billion people.	N.A.
P6	Enabling advanced user controlled privacy.	High

MONB5G architecture

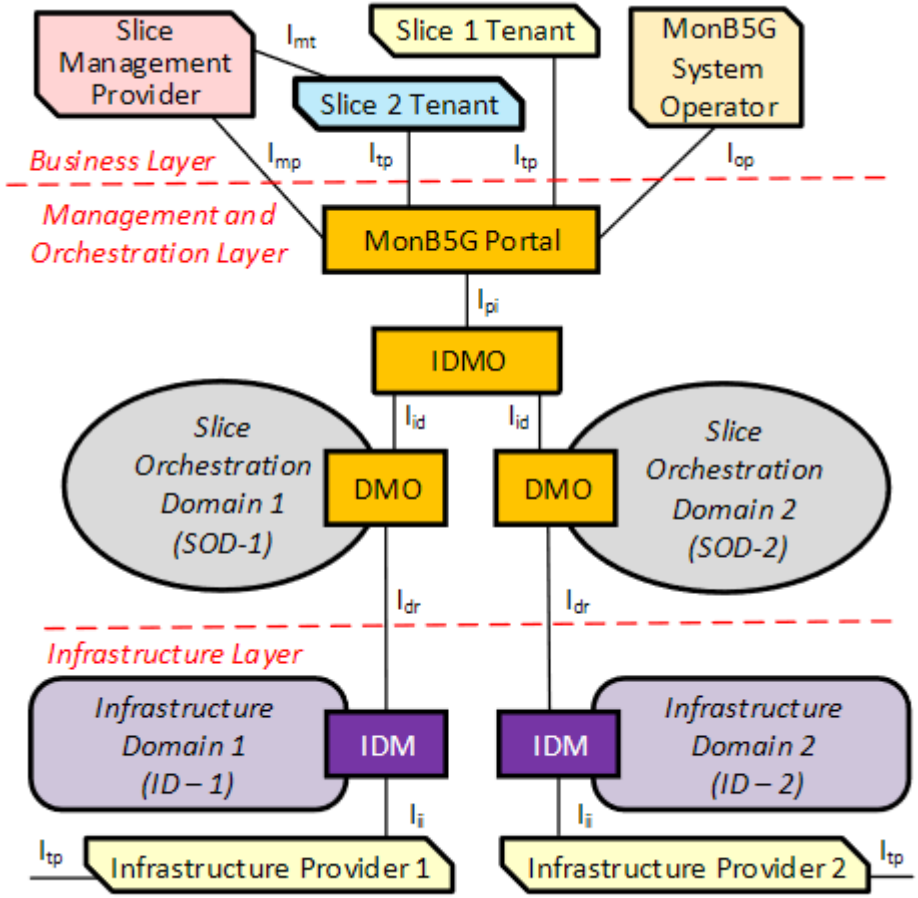

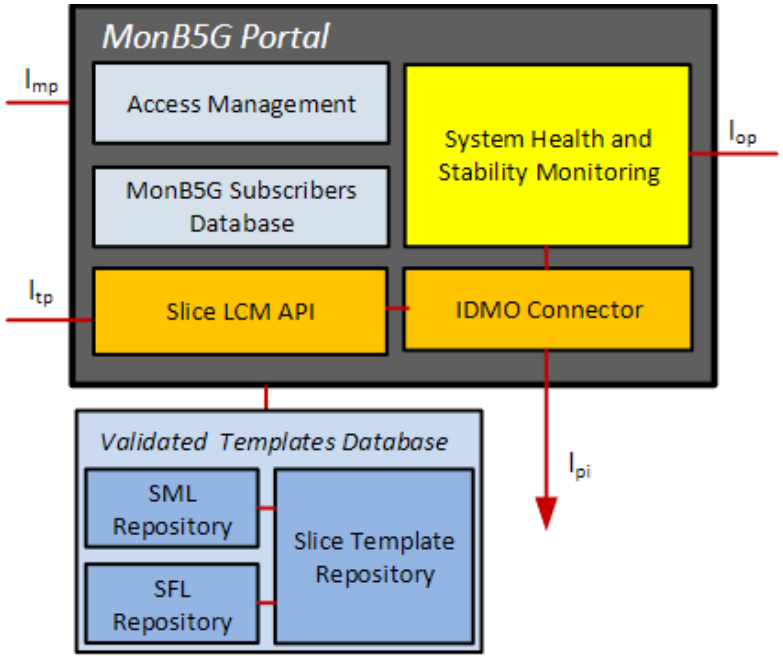

MONB5G architecture features

A strong separation of concerns

Support for Management as a Service (MaaS)

Distribution of management operations.

Enhanced security of slices

Hierarchical, end-to-end slice orchestration

Programmable, energy-aware infrastructure management.

In-Slice Management capability of orchestration

Scalable and programmable slice management

MONB5G architecture
Overall MonB5G management and orchestration framework

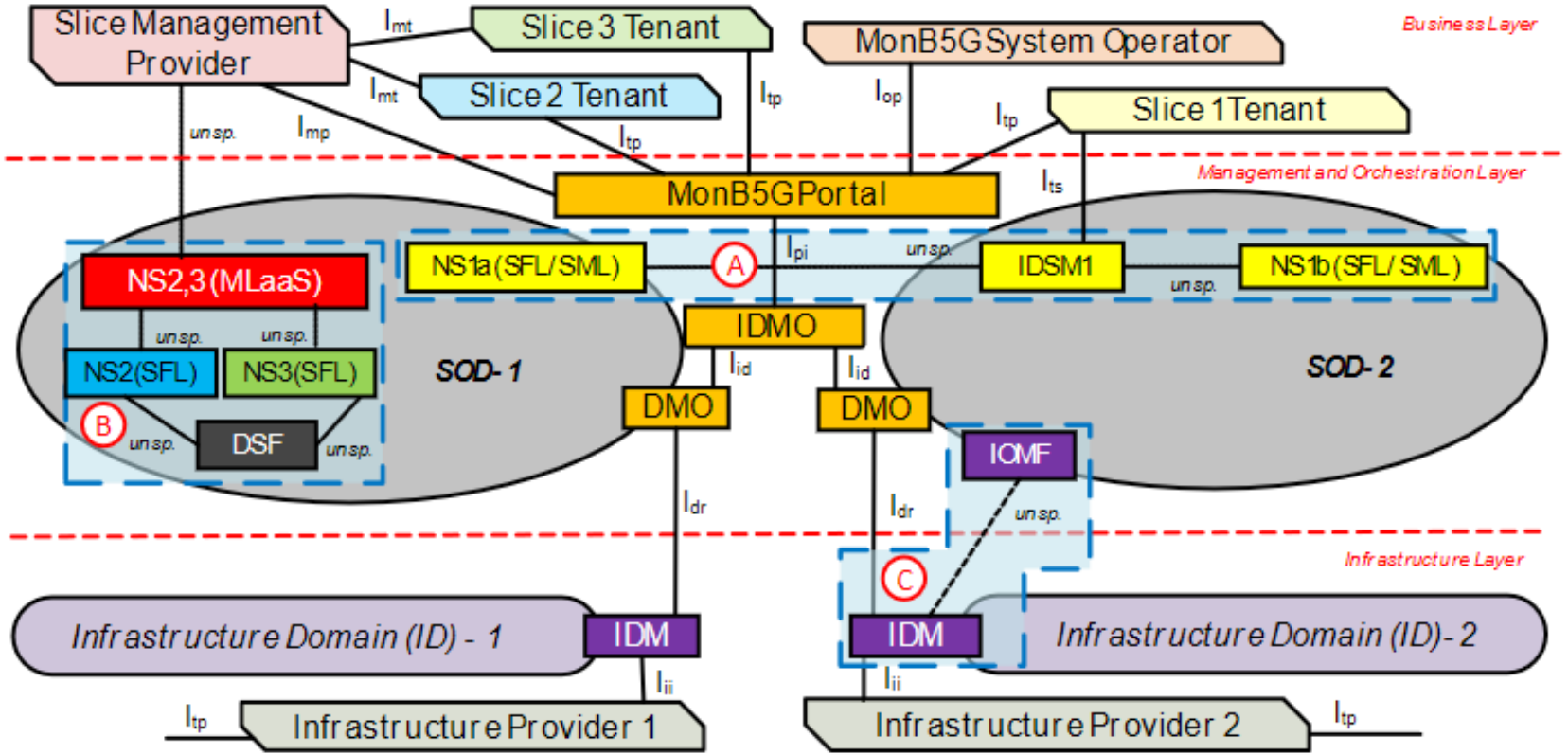

MONB5G architecture – control loops at multiple levels

Different control loops with different scopes, goals, and timescales, at the following levels:

- Global OSS/BSS level
- Technological/Orchestration Domain level
- Slice level
- Node (VNF/PNF/CNF) level

MONB5G architecture - IDMO internal structure

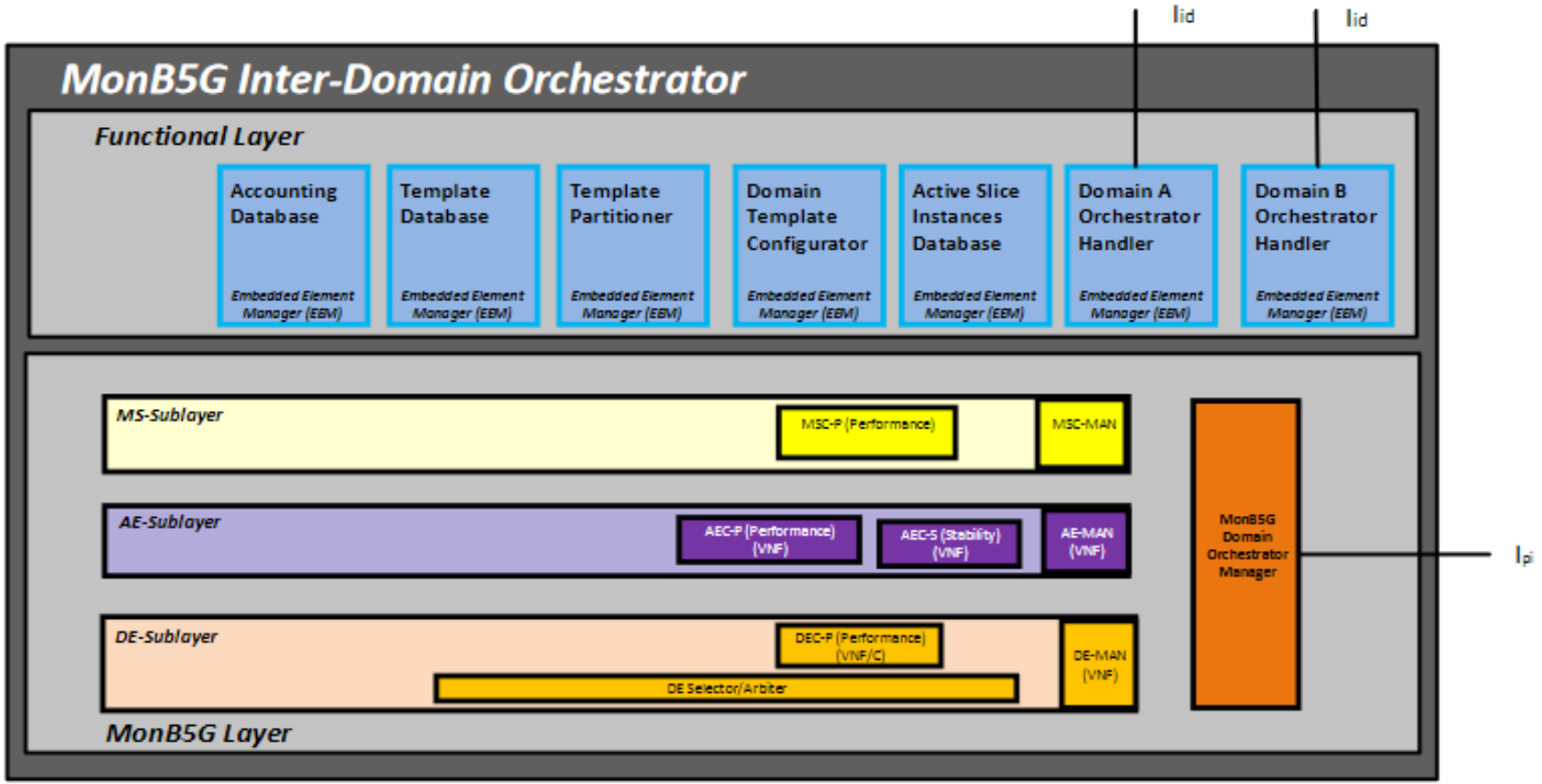

MONB5G architecture - Internal structure of the Domain Manager

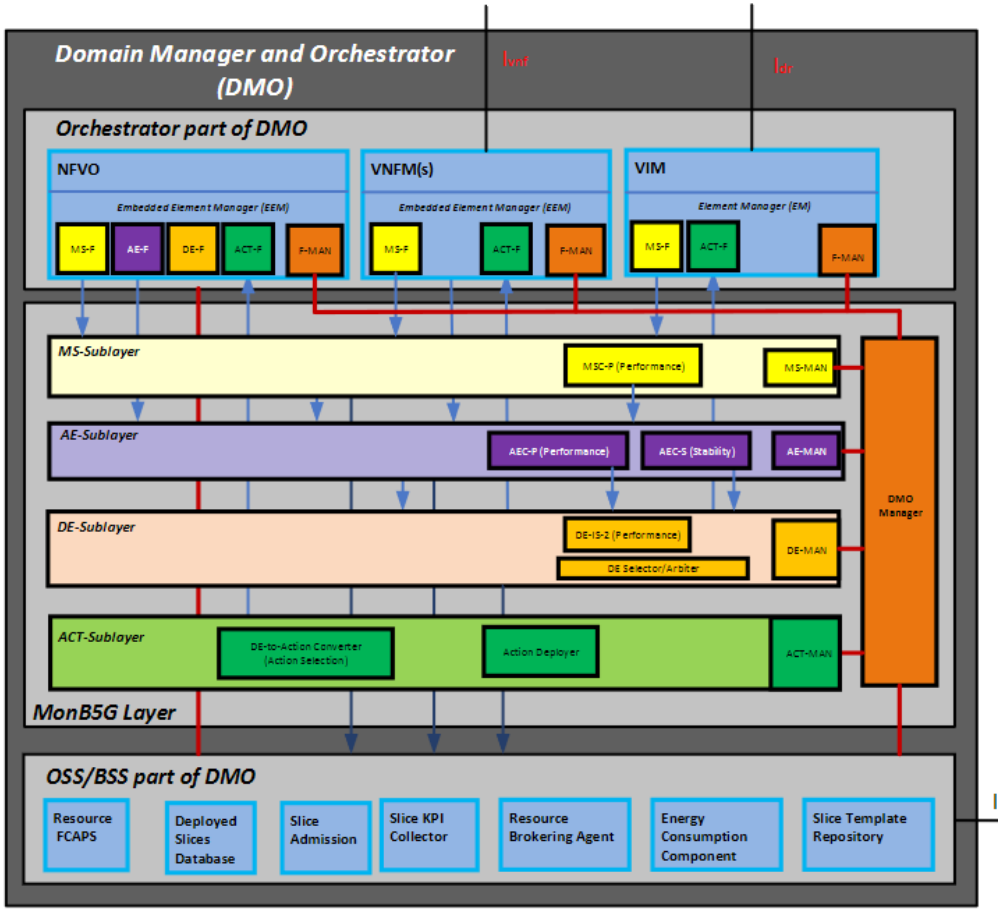

MONB5G architecture
Internal Structure of IDM

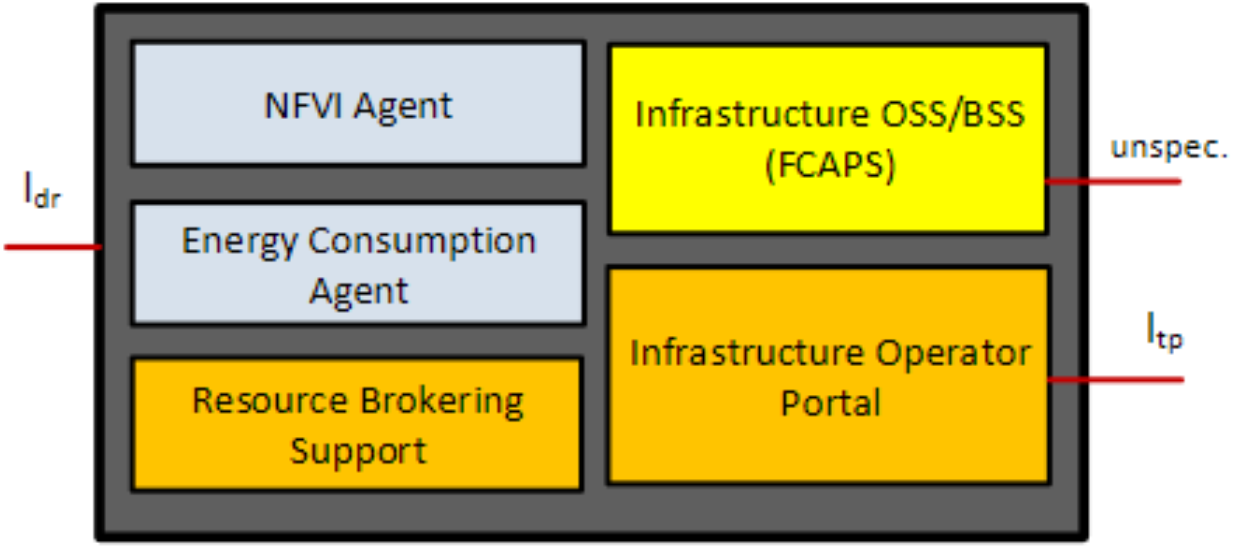

MONB5G architecture
Monitoring System Sublayer internal components

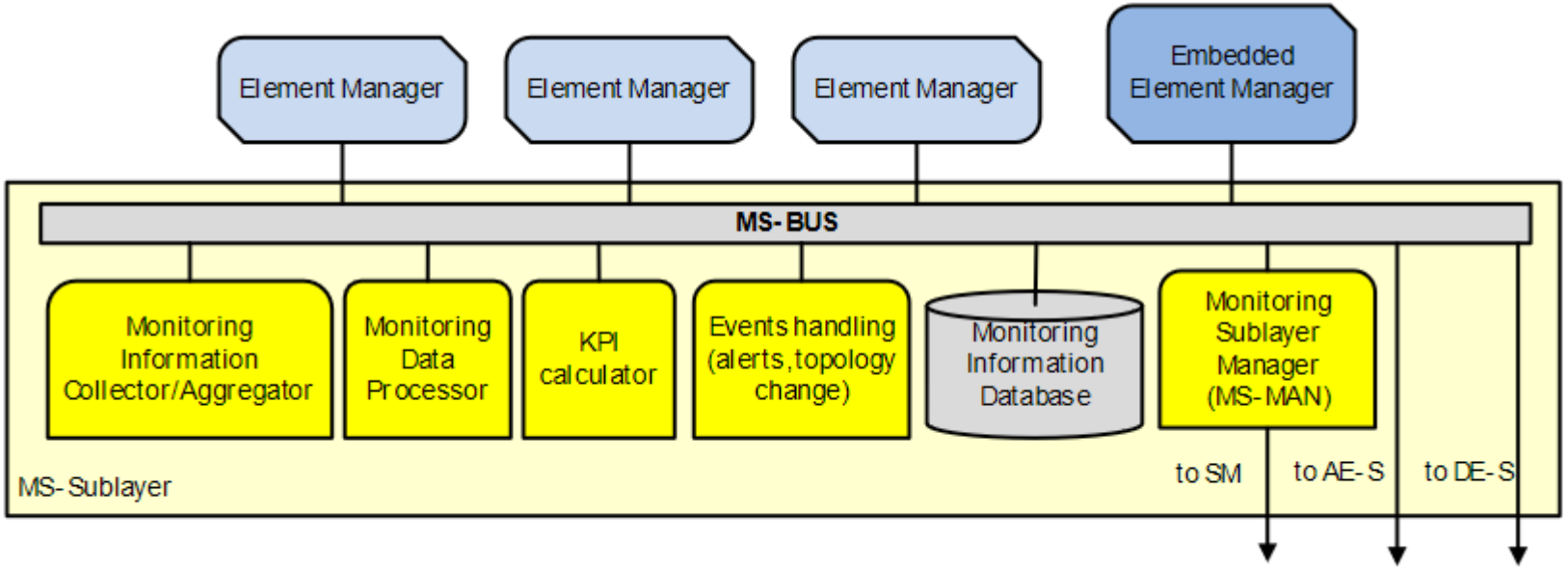

MONB5G architecture
Analytics Engine Sublayer internal components

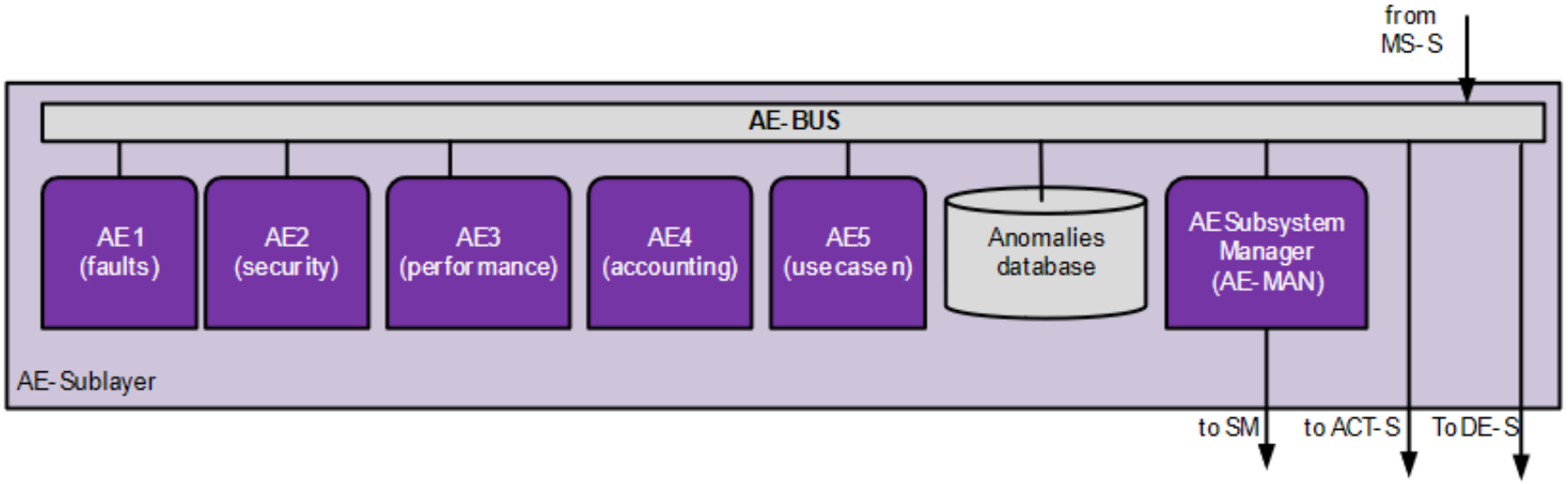

MONB5G architecture
Decision Engine Sublayer Internal components

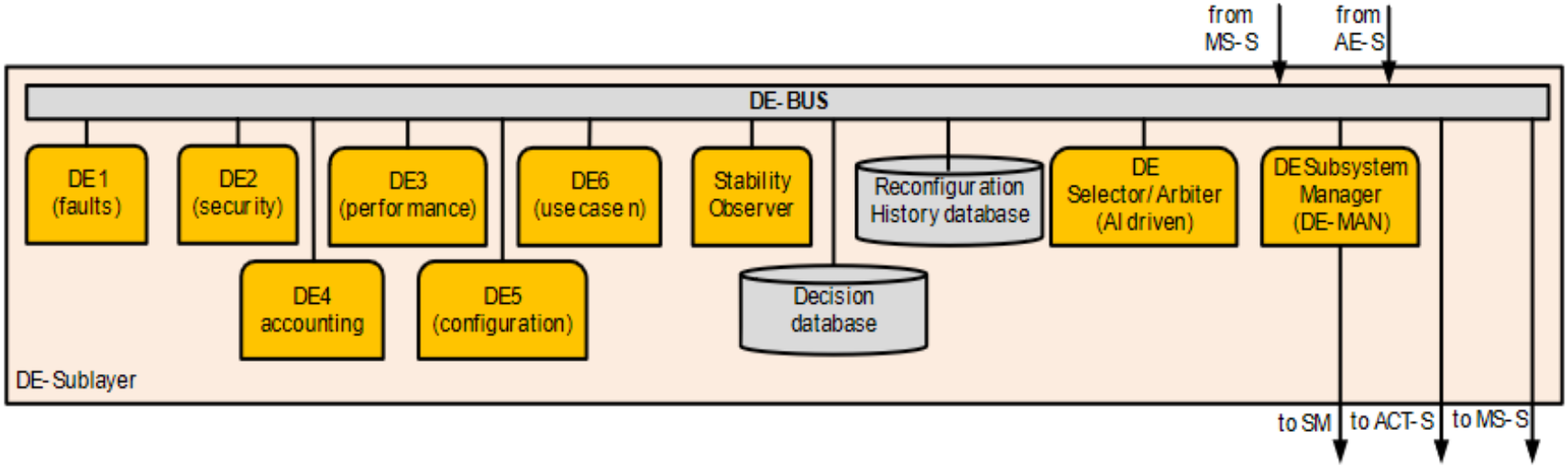

MONB5G architecture
Actuator Sublayer Internal components

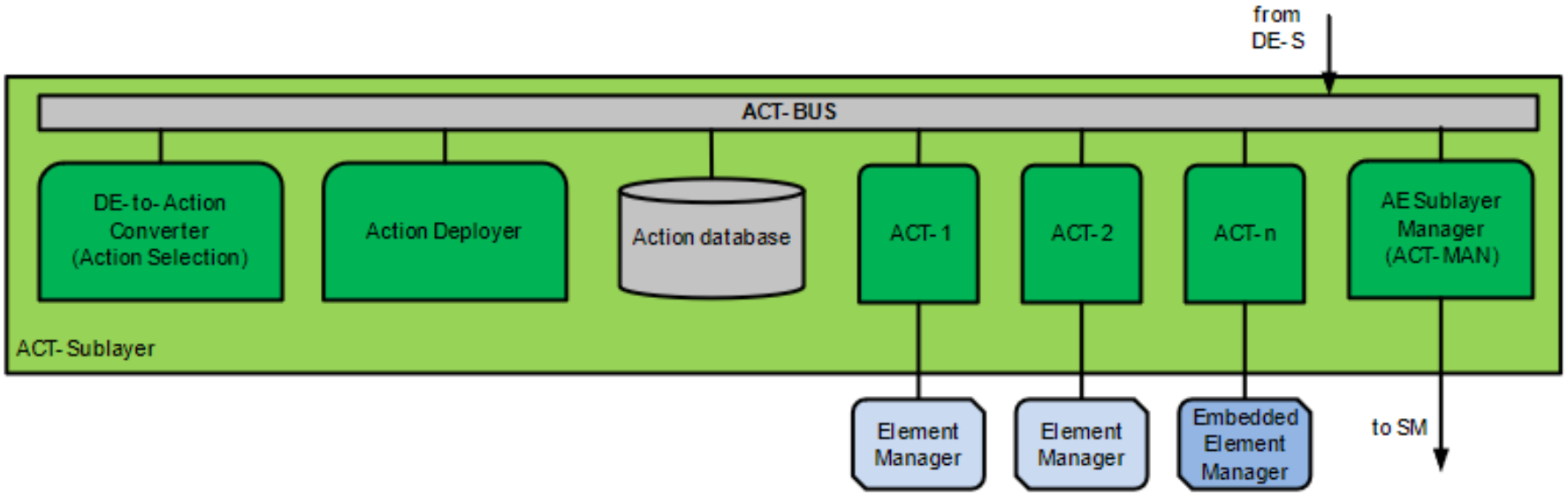

An example of usage of MLaaS (security, multitenancy to be added)

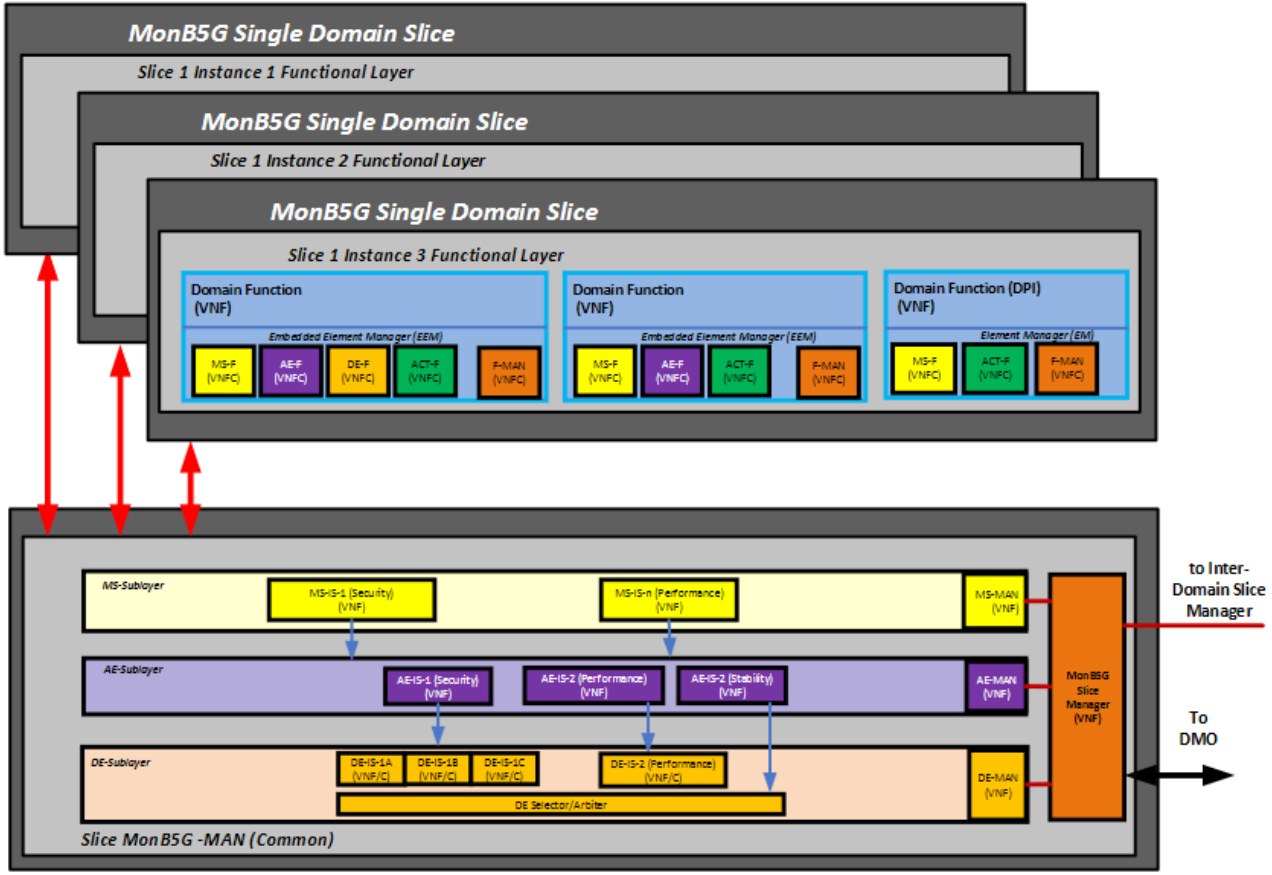

MonB5G Architecture Instantiation for a Single Tenant and three Technological Domain

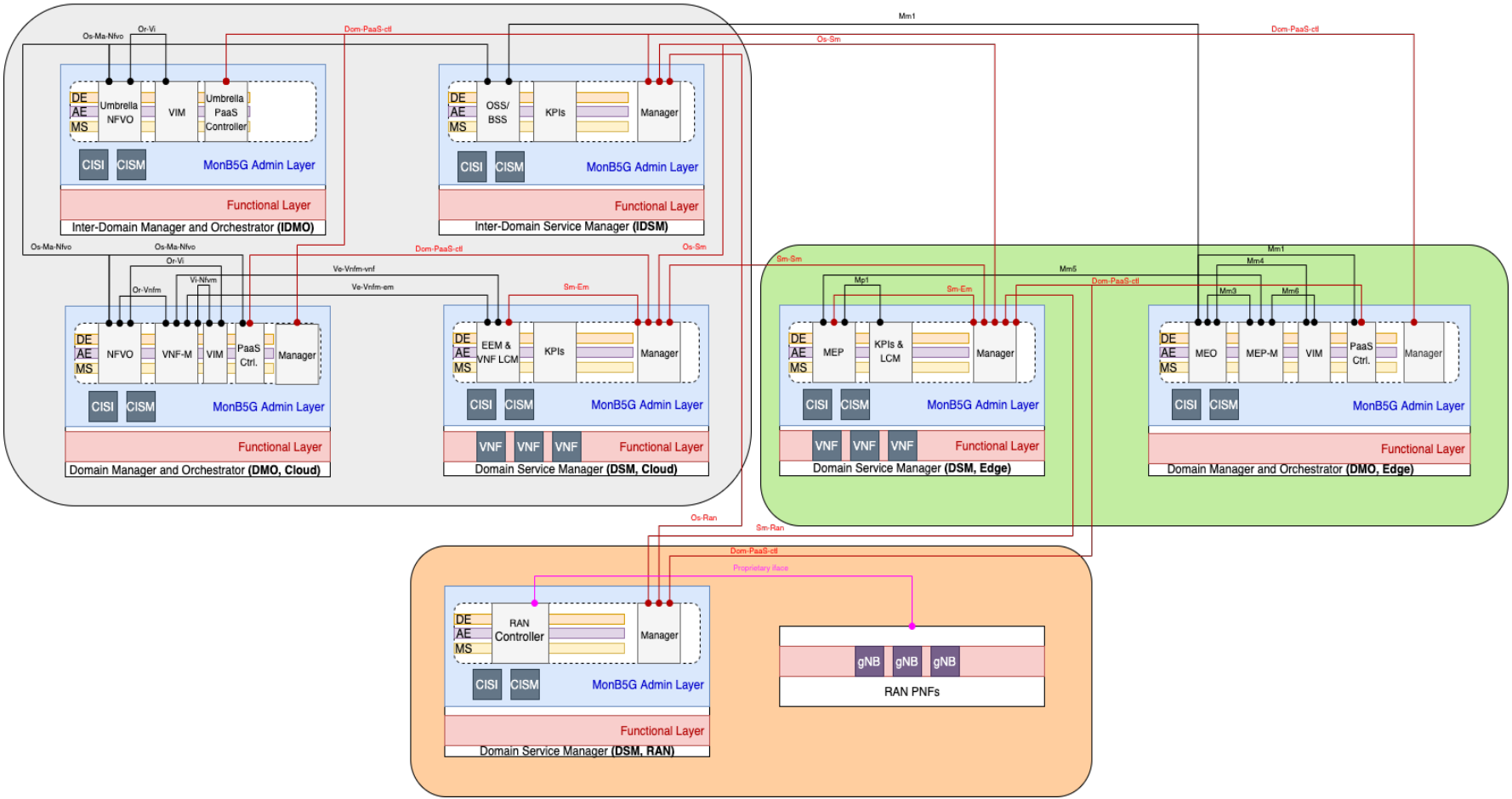

MONB5G Use Case 1: Elastic end-to-end slice management

Mapping of experimental scenario and Interaction of stakeholders for UC1

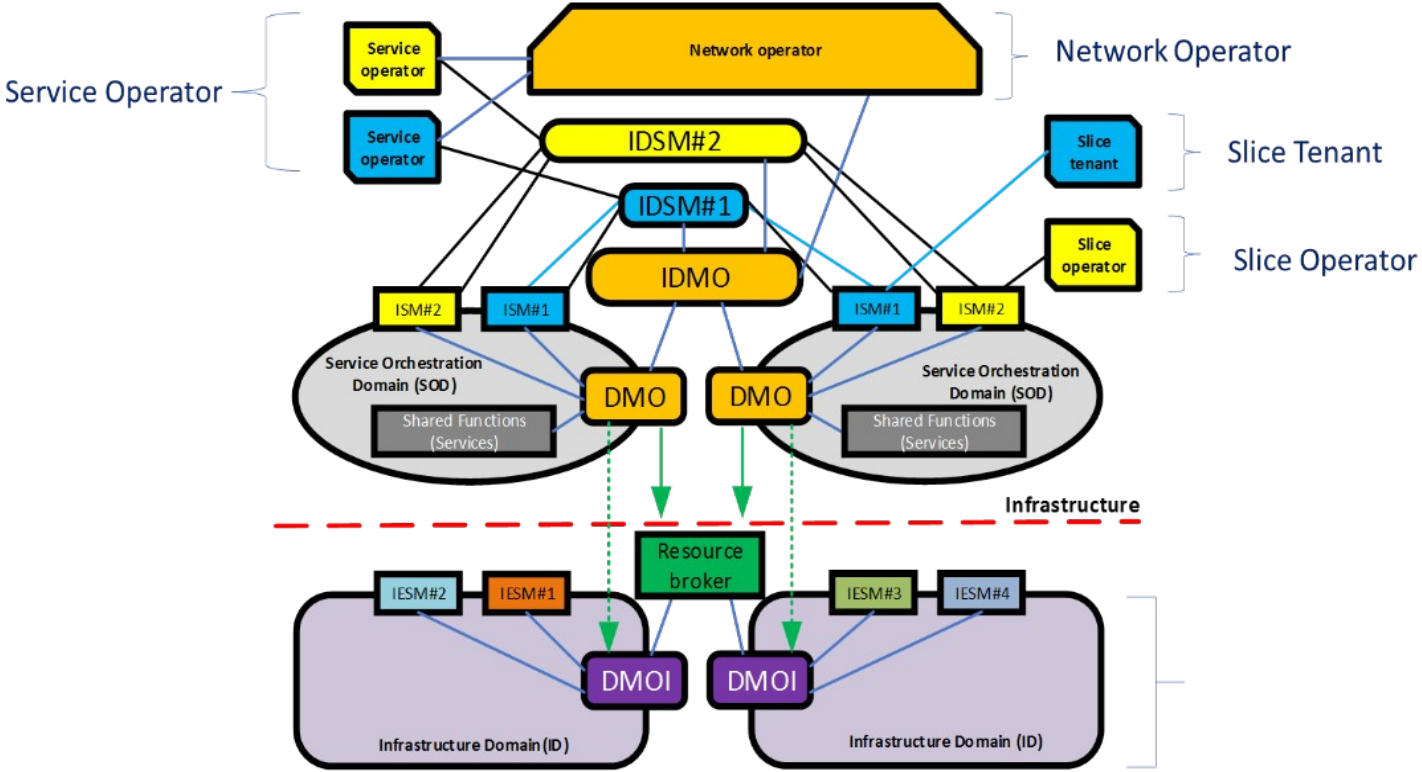

MONB5G Use Case 2: AI-assisted policy-driven security monitoring & enforcement

Mapping of experimental scenario and Interaction of stakeholders for UC2 in MonB5G architecture

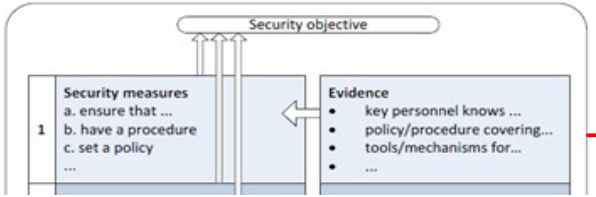

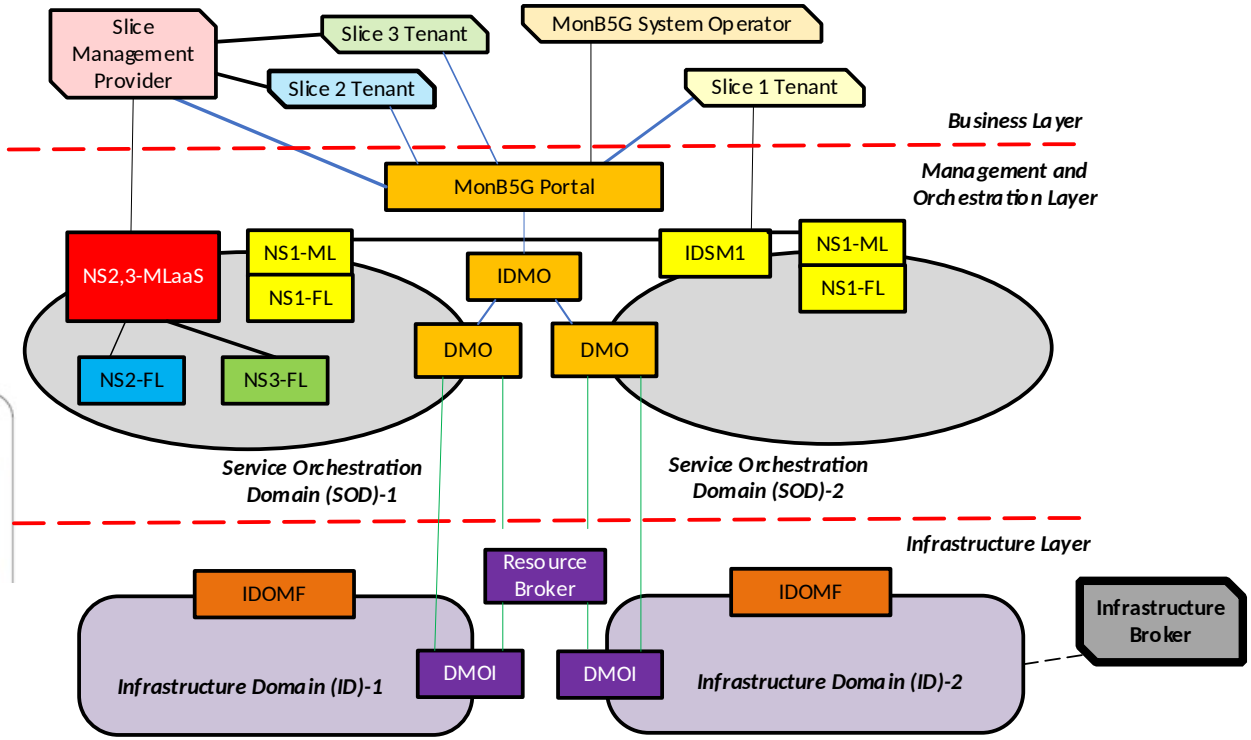

Interne Orange

MONB5G's PoC Platform in Barcelona

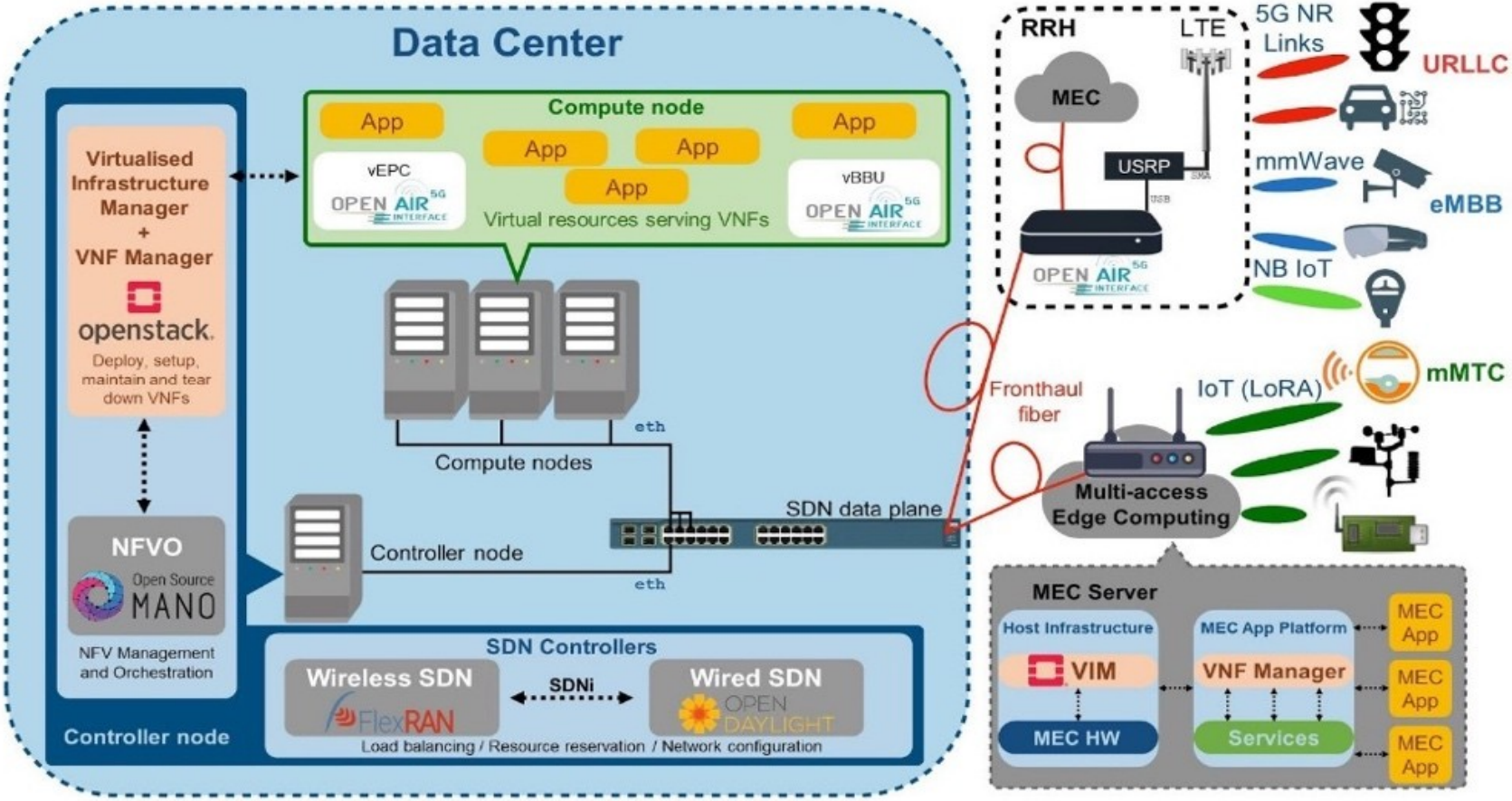

MONB5G deliverables and outcomes at M18

- **Dissemination and Communication:** https://www.monb5g.eu/dissemination-n-communication/
- **Public Deliverables:** https://www.monb5g.eu/deliverables/
- **Publications (Journals, conference papers, white papers, etc.):** https://www.monb5g.eu/publications/
- Newsletters: https://www.monb5g.eu/newsletters/
- **Video presentation:** https://www.youtube.com/watch?v=TzWEuUEyjUY

Thank You!!!

Amina Boubendir
Orange Labs, France
amina.boubendir@orange.com

This Project has received funding from the European Union´s Horizon 2020 research and innovation programme under Grant Agreement No. 871780